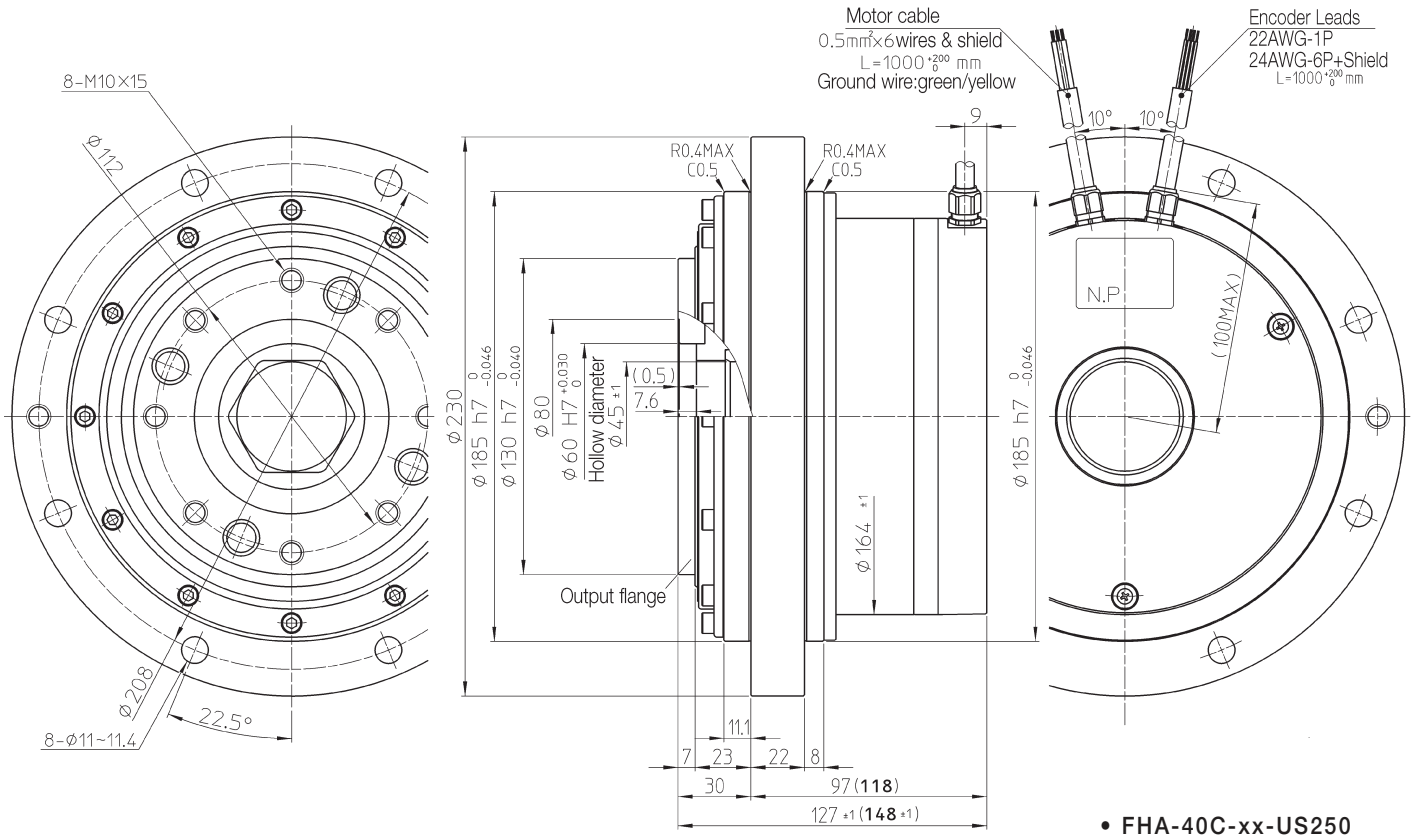

• **FHA-40C-xx-US250**

Notice:
All specifications and dimensions shown in the drawing are subject to change without notice. This drawing is the property of Harmonic Drive LLC. This data is believed to be accurate, however, Harmonic Drive LLC assumes no liability for any errors or omissions in the specifications, models or drawings.

Harmonic Drive LLC
Tel: 800-921-3332
www.harmonicdrive.net

HARMONIC DRIVE

Harmonic Drive LLC
800-921-3332
www.harmonicdrive.net