FHA-11C-XXX-IDT15b14bE-PM_
(Units: mm)

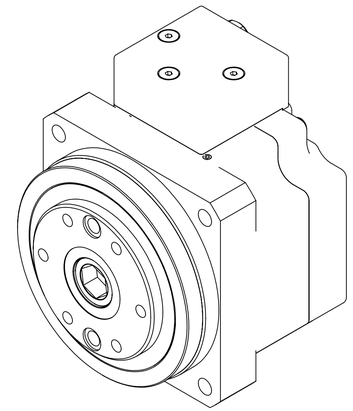

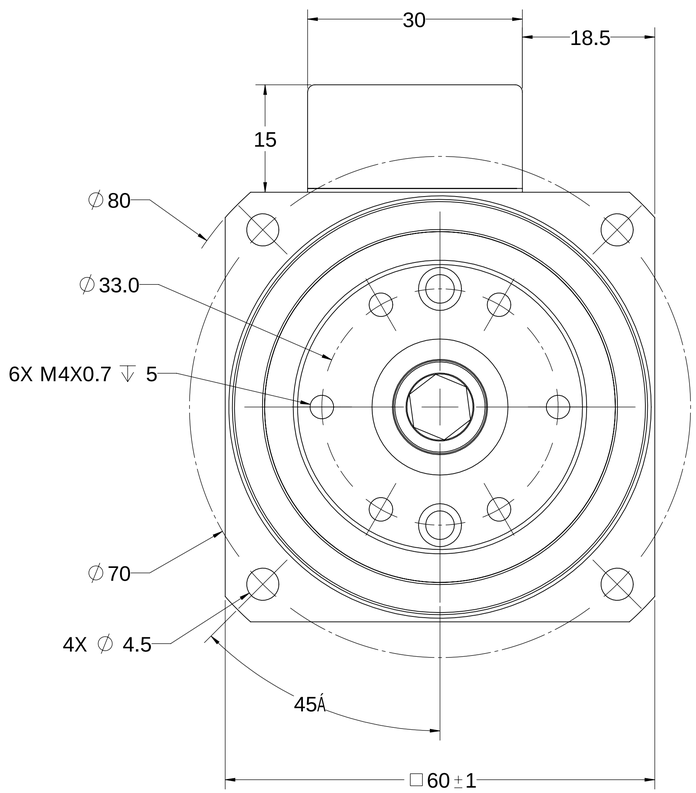

PM1 OPTION SHOWN

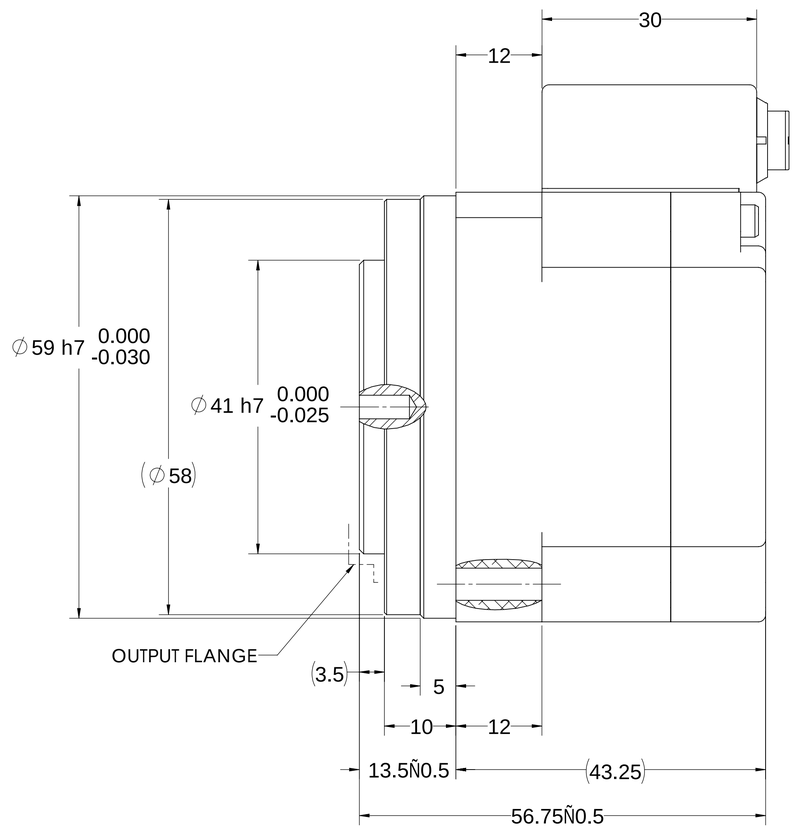

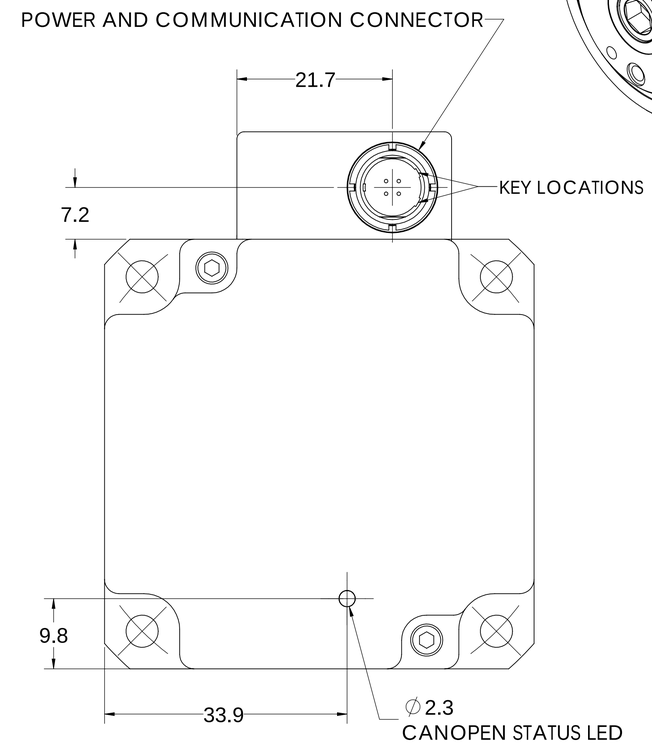

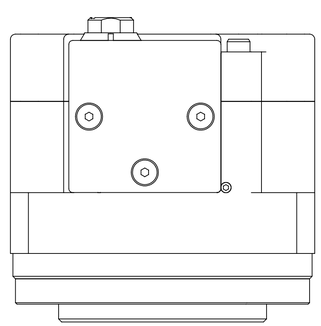

PM1 OPTION
REAR EXIT

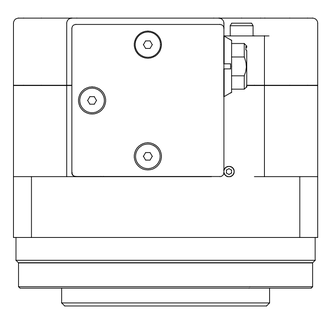

PM2 OPTION
RIGHT EXIT

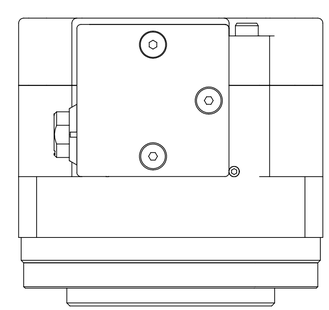

PM3 OPTION
LEFT EXIT

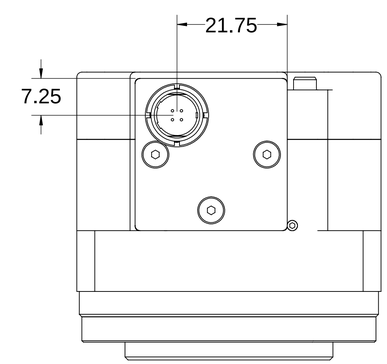

PM4 OPTION
TOP EXIT

Notice:
All specifcations and dimensions shown in the drawing are subject to change without notice. This drawing is the property of Harmonic Drive LLC. This data is believed to be accurate. However, Harmonic Drive LLC assumes no liability for any errors or omissions in the specifications, models, or drawings.

Harmonic Drive LLC
Tel: 800-921-3332
www.harmonicdrive.net