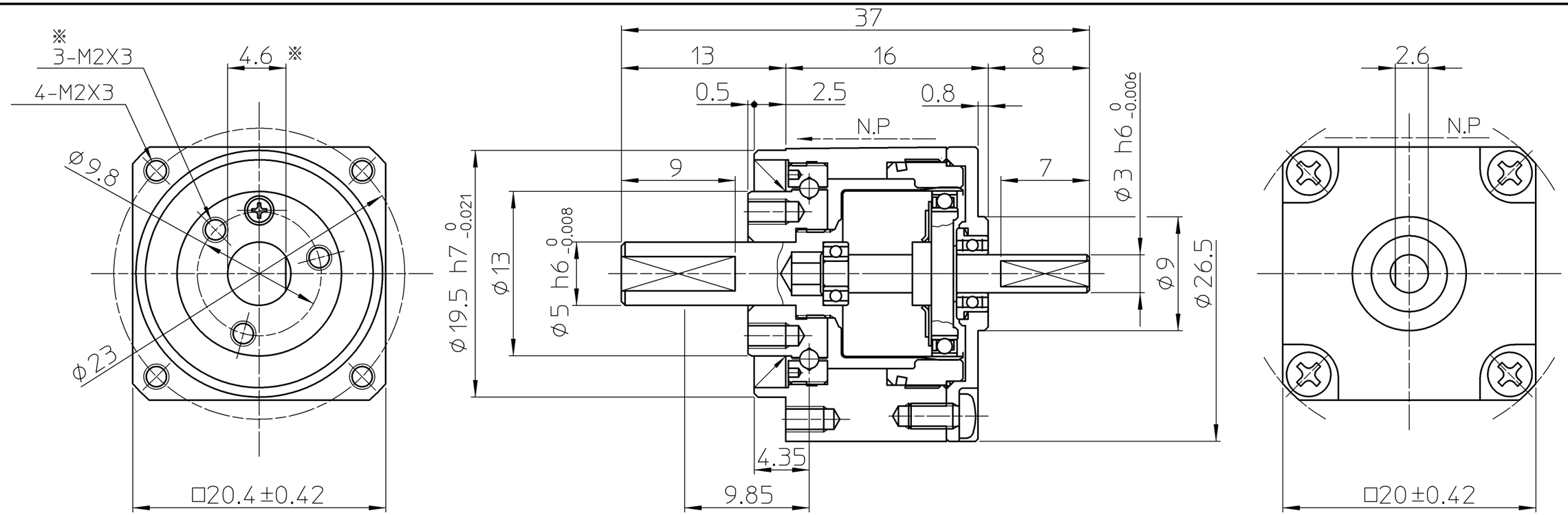

Rating Table

1. Ratio	30	50	100
2. Rated Torque at 2000 rpm	0.25 Nm	0.40 Nm	0.60 Nm
3. Limit for Repeated Peak Torque	0.50 Nm	0.90 Nm	1.4 Nm
4. Limit for Average Torque	0.38 Nm	0.53 Nm	0.94 Nm
5. Limit for Momentary Peak Torque	0.90 Nm	1.8 Nm	2.7 Nm
6. Max. Input Speed rpm	10000 r/min	10000 r/min	10000 r/min
7. Limit for Average Input Speed rpm	6500 r/min	6500 r/min	6500 r/min

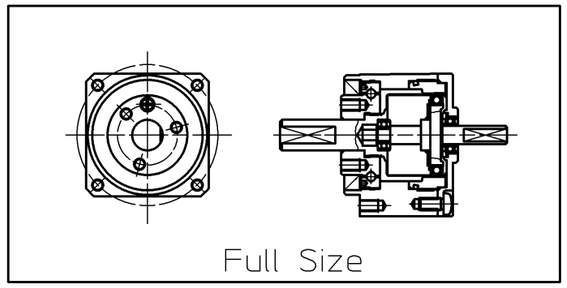

Performance Date for the Output Bearing

Pitch Circle	Offset	Dynamic Load Rating C	Static Load Rating Co	Permissible Dynamic Tilting Moment	Tilting Moment Stiffness	Permissible Dynamic Radial Load	Permissible Dynamic Axial Load
13.5 mm	4.85 mm	9.14x10^2 N	7.63x10^2 N	0.89 Nm	7.41x10^2 Nm/rad	90 N	270 N

REMARKS

Lubrication : Harmonic Drive Harmonic Grease SK-2

Output Bearing Multemp HL-D

※ Please remark that there is no position relationship between 3-M2 and keyway.

Designing and/or Handling of Harmonic Drive Gears(Harmonic Actuators) has to Comply with technical information shown in Harmonic Drive Catalog

PROPRIETORSHIP
This drawing (document) is the **PROPERTY** of Harmonic Drive Systems,Inc. and shall not be traced, otherwise copied or used for purposes other than agreed upon, nor communicated to any third party without written permission of Harmonic Drive Systems,Inc.

CUSTOMER DRAWING NO.

訂正 REV	来歴 DESCRIPTION

仕様 SPEC (標準) 40-6029A01 尺度 SCALE 3:1

機械加工無記号公差 GENERAL TOLERANCE	0 ~ 0.5	0.5 ~ 6	6 ~ 30	30 ~ 120	120 ~ 315	315 ~ 1000	1000 ~ 2000
	±0.05	±0.1	±0.2	±0.3	±0.5	±0.8	±1.2

備考 REMARKS : 特記無き角はC0.2以下、すみの丸みはR0.4以下

無記号表面アラサ SURFACES MARKED EXCEPT AS NOTED ▽→▽ 50S ▽▽→▽▽ 25S ▽▽▽→▽▽▽ 6.3S

DWG SIZE A3 | UNIT mm | THIRD ANG

設計 DESIGN	K.SHIRASAWA	May-11-07
検図 VRFD	E.KIDOOKA	May-11-07
承認 APPD	E.KIDOOKA	May-11-07

HARMONIC DRIVE SYSTEMS INC TOKYO JAPAN

タイトル TITLE ASSEMBLY DRAWING

製品名 ARTICLE CSF-5-XXX-1U

図番 DWG No B2A9852 −

本図は(株)ハーモニック・ドライブ・システムズの所有に係わるものです。許可なく第3者に見せたり、トレースその他の複写及び指定された用途以外には使用しないで下さい。

TP-0E3