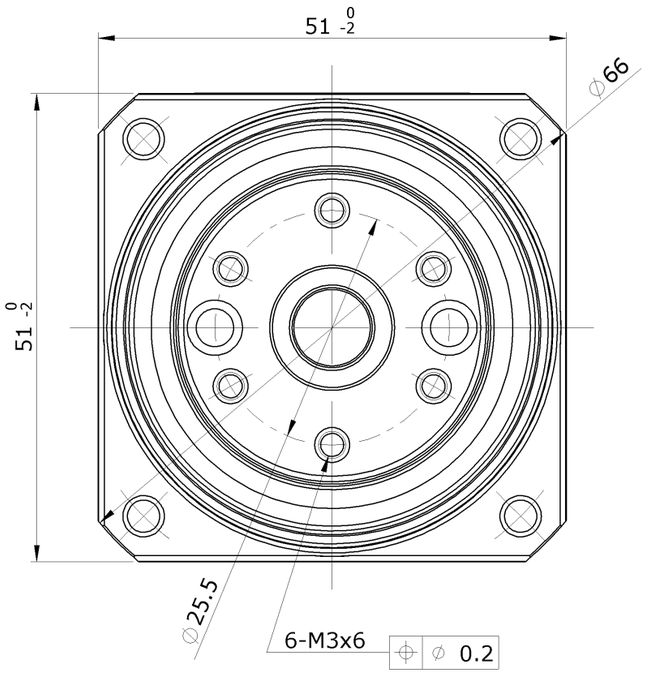

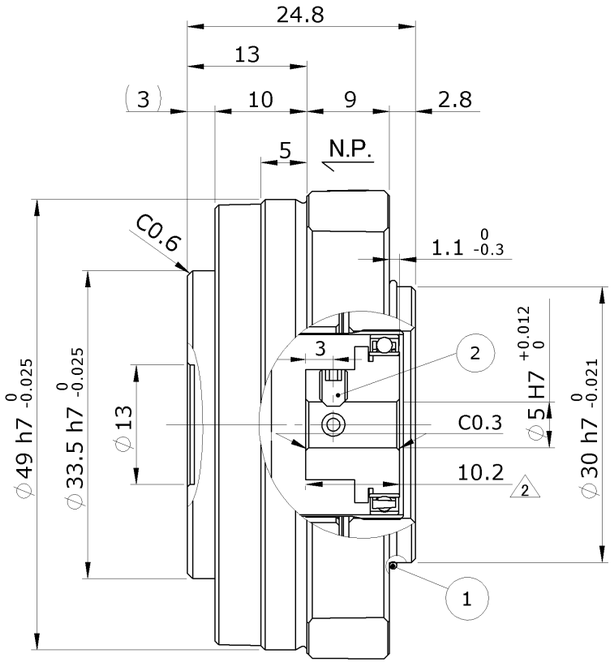

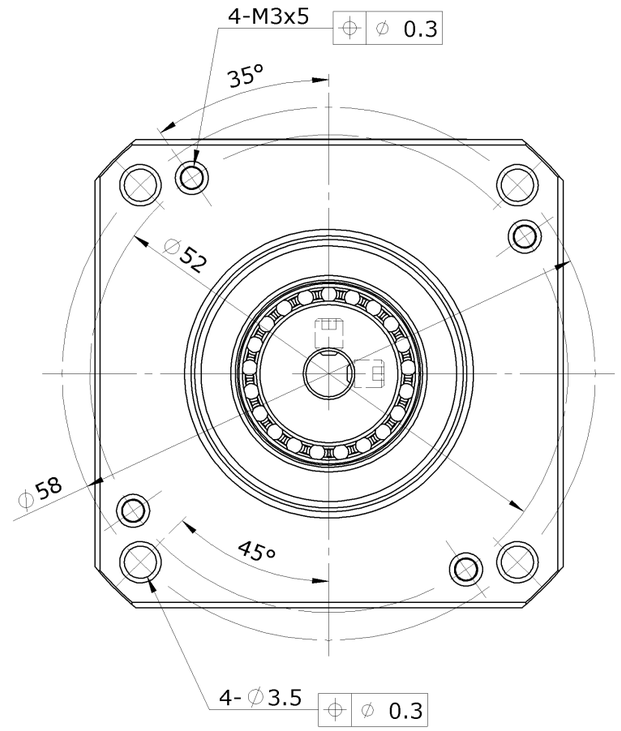

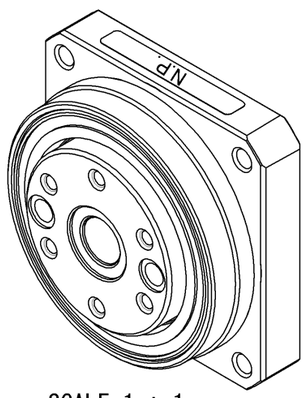

SCALE 1 : 1

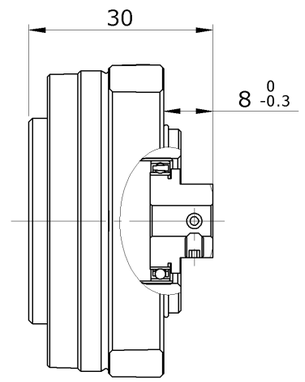

Dimension of interface
at counter-assembly

SCALE 1 : 1

ITEM NO.	Parts	型式(TYPE)	QTY.	Note
1	O-ring	ϕ29.8x0.8	1	Enclosed in the box
2	Set Screw	M3x4	2	

REMARKS

1. Lubrication : HarmonicDrive®Gear HarmonicGrease® SK-2
   Cross Roller Bearing HarmonicGrease® SK-2
2. Designing and/or Handling of HarmonicDrive®Gears(HarmonicDrive®Actuators) has to Comply with technical information shown in HarmonicDrive®Catalog .

訂正 REV	2	来歴 DESCRIPTION	Delete Tolerance.
仕様 SPEC	(標準)	尺度 SCALE	1.5:1

機械加工無記号公差 GENERAL TOLERANCE	0 ~ 0.5	0.5 ~ 6	6 ~ 30	30 ~ 120	120 ~ 315	315 ~ 1000	1000 ~ 2000
	±0.05	±0.1	±0.2	±0.3	±0.5	±0.8	±1.2

備考 REMARKS : 特記無き角はＣ０．２以下、すみの丸みはＲ０．４以下
CHAMFER UNSPECIFED SHARP CORNERS 0.25 / ALL UNSPECIFED RADLL TO BE 0.5 MAX
無記号表面アラサ SURFACES MARKED EXCEPT AS NOTED 50S → 25S → 6.3S

DWG SIZE A3 | UNIT mm | THIRD ANG

PROPRIETORSHIP This drawing (document) is the PROPERTY of Harmonic Drive Systems,Inc. and shall not be traced, otherwise copied or used for purposes other than agreed upon, nor communicated toany third party without written permission of Harmonic Drive Systems,Inc.

Registered Trademark in Japan.

設計 DESIGN	N.Tanioka	May-26-'15
検図 VRFD	E.Kidooka	May-26-'15
承認 APPD	H.Tsukahara	May-26-'15

HARMONIC DRIVE SYSTEMS INC TOKYO JAPAN

タイトル TITLE: ASSEMBLY DRAWING
製品名 ARTICLE: CSF-8-100-2UP
図番 DWG No: C2A7781 — B

9810028939