| LTR | ECA NO | BY | CHKD | APPD | ISSUE DATE |
|---|---|---|---|---|---|
| A | 02-079 | RGB | REL TO MAN | | |

| PARTS LIST | | |
|---|---|---|
| 1 | DYNAMIC CIRCULAR SPLINE | 1 |
| 2 | STATIC CIRCULAR SPLINE | 2 |
| 3 | FLEXSPLINE | 2 |
| 4 | WAVE GENERATOR ASSEMBLY | 2 |
| 5 | WEAR WASHERS | 2 |
| 6 | SPACER RING | 1 |

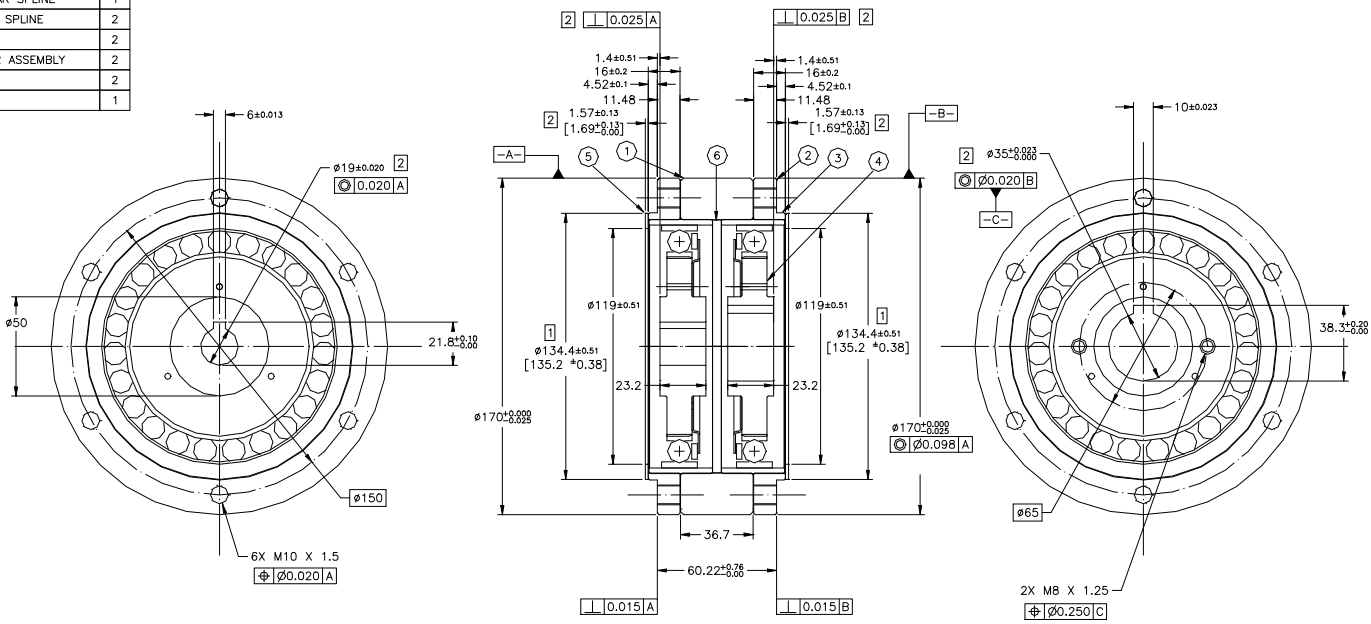


NOTES:

1. TO TRAP FLEXSPLINE IN PROPER POSITION, HARDENED WASHERS ARE SUPPLIED. THESE WASHERS MUST BE RETAINED AXIALLY AS WELL AS RADIALLY TO DIMENSION GIVEN

NOTE: IF CUSTOMER'S MOUNTING SURFACES ARE HARD [Rc 44-47] AND EXTEND DOWN TO THE GIVEN DIMENSION THE WASHERS WILL NOT BE NECESSARY.

2. DIMENSIONS ESTABLISH INTERFACE AND INSTALLATION REQUIREMENTS. MAINTAIN AT ASSEMBLY AND UNDER ALL OPERATING CONDITIONS.

3. WEIGHT lb/kgf 15.30/6.9


Notice:
All specifications and dimensions shown in the drawing are subject to change without notice. This drawing is the property of Harmonic Drive LLC. This data is believed to be accurate, however, Harmonic Drive LLC assumes no liability for any errors or omissions in the specifications, models or drawings.



Harmonic Drive LLC
Tel: 800-921-3332
www.harmonicdrive.net


UNLESS OTHERWISE SPECIFIED: DIMENSIONS ARE IN INCHES
TOLERANCES ON WHOLE DIMENSIONS: ± .005 ± .01 ±2°
DECIMALS ANGLES
WACHINED SURFACES √ 63
MATERIAL

ISSUE DATE
CONTRACT NO.
DRAFTSMAN NAN 8/6/02
CHECKER 8/6/02
MFG.ENG.
DESIGN ENG.
QUALITY
SUBMITTED
SIMILAR TO

Harmonic Drive LLC
800-921-3332
www.harmonicdrive.net

FBB-50 INSTALLATION

| SIZE | FSCM | | REV. |
|---|---|---|---|
| D | 34519 | 1010356 | A |

SCALE 1:1 UNIT WT. SHEET OF 1