MOTOR CONNECTOR

No.	SIGNAL
POWER1	U
POWER2	V
POWER3	W
PE	PE

ENCODER CONNECTOR

No.	SIGNAL
1	Vbat
2	GND(bat)
3	Vcc
4	GND(Vcc)
5	-
6	-
7	SD+
8	SD-
CONNECTOR FLANGE	FG

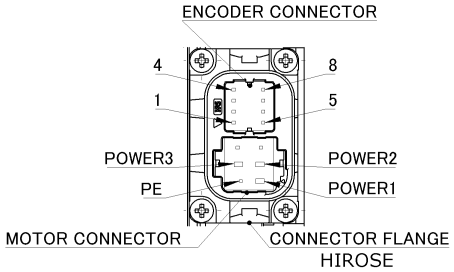

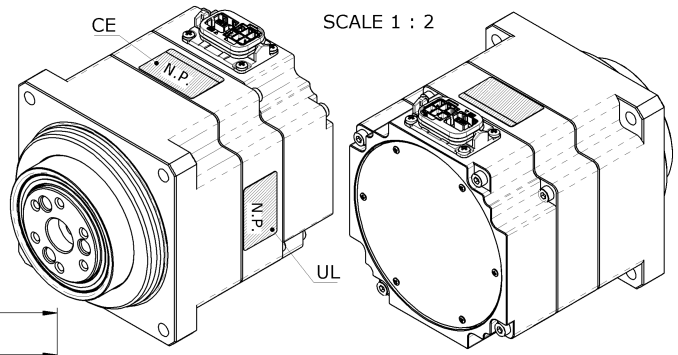

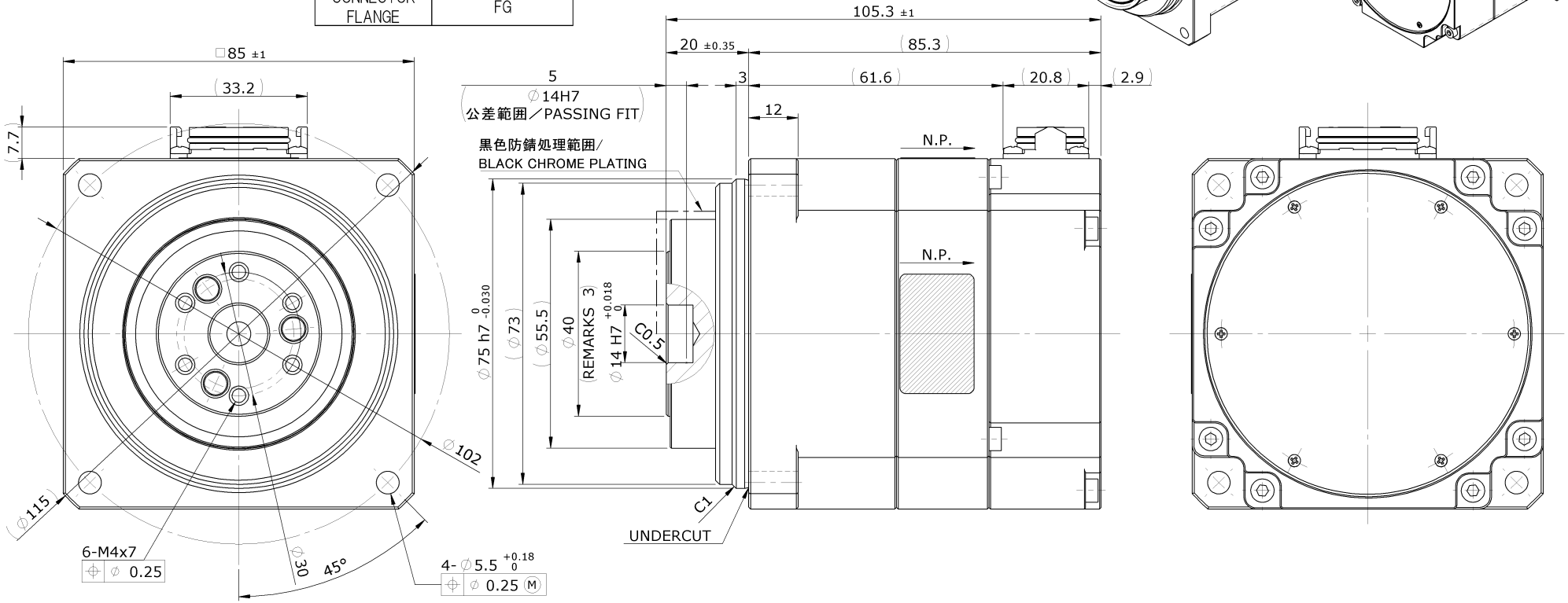

注記／REMARKS

1.	入力電源電圧(ドライバ) ／ INPUT SUPPLY VOLTAGE(DRIVER)	AC200V
2.	中継ケーブル ／ EXTENSION CABLE	EWE-SERIES
3.	回転部 ／ ROTATIONAL PART	

アクチュエータ仕様、取り扱いについては技術資料【FPAシリーズ技術資料】を参照してください。
DESIGNING AND/OR HANDLING OF HarmonicPlanetary®/ACTUATORS HAS TO COMPLY WITH TECHNICAL INFORMATION SHOWN IN FPA SERIES MANUAL.

REV 訂正		DESCRIPTION 来歴
標準	SPEC 仕様	

GENERAL TOLERANCE	0 ~ 0.5	0.5 ~ 6	6 ~ 30	30 ~ 120	120 ~ 315	315 ~ 1000	1000 ~ 2000
機械加工無記号公差	±0.05	±0.1	±0.2	±0.3	±0.5	±0.8	±1.2

REMARKS : ALL CHAMFER UNSPECIFIED SHARP CORNERS TO BE 0.2 MAX / ALL UNSPECIFIED RADII TO BE 0.4 MAX
備考 特記無き角はC0.2以下、すみの丸みはR0.4以下
SURFACES MARKED EXCEPT AS NOTED 50S 25S 6.3S
無記号表面アラサ

SCALE 尺度 1:1
DWG SIZE A3
UNIT mm
THIRD ANG

DESIGN 設計	S.TAKAYAMA	2026/01/08
VRFD 検図	T.HIRABAYASHI	2026/01/09
APPD 承認	N.Tanioka	2026/01/09

HARMONIC DRIVE SYSTEMS INC TOKYO JAPAN

TITLE タイトル 納入仕様図／CONFIRMATION DRAWING
ARTICLE 製品名 FPA14A11F0HG-F08A200-32S24bA-C
DWG No 図番 C020609

PROPRIETORSHIP This drawing (document) is the PROPERTY of Harmonic Drive Systems,Inc. and shall not be traced, otherwise copied or used for purposes other than agreed upon, nor communicated to any third party without written permission of Harmonic Drive Systems,Inc.
Registered Trademark in Japan.

FF00017617