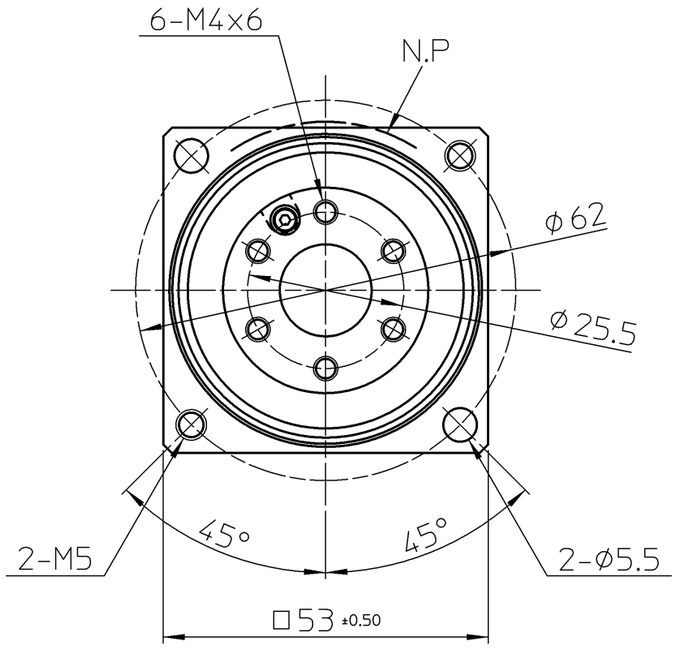

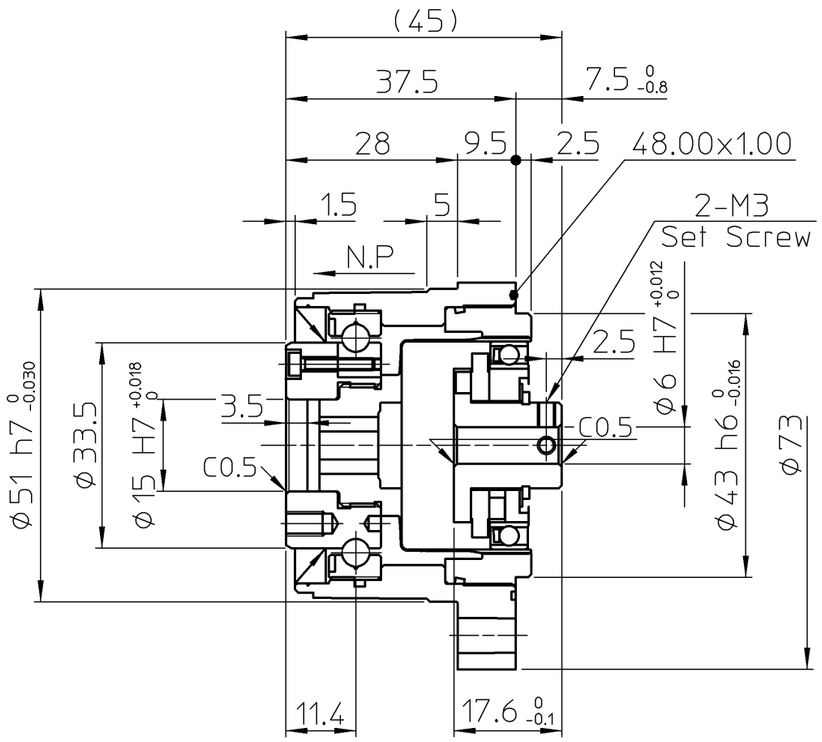

Dimension of interface at counter-assembly

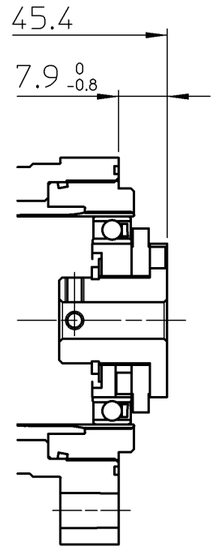

ENCLOSED IN THE BOX	
O-ring	48.00x1.00

CUSTOMER DRAWING NO.

Rating Table

Rated Torque (2000r/min)	Limit for Repeated Peak Torque	Limit for Average Torque	Limit for Momentary Peak Torque	Max. Input Speed	Limit for Average Input Speed
5.4 Nm	18 Nm	6.9 Nm	35 Nm	8500 r/min	3500 r/min

Performance Date for the Output Bearing

Pitch Circle	Offset	Dynamic Load Rating C	Static Load Rating Co	Permissible Dynamic Tilting Moment	Tilting Moment Stiffness	Permissible Dynamic Axial Load
35 mm	11.4 mm	6.12×10^3 N	5.85×10^3 N	13.2 Nm	1.34×10^4 Nm/rad	1800 N

REMARKS

Lubrication : Harmonic Drive Harmonic Grease SK-2
Output Bearing Multemp HL-D
Designing and/or Handling of Harmonic Drive Gears (Harmonic Actuators) has to Comply with technical information shown in Harmonic Drive Catalog.

PROPRIETORSHIP
This drawing (document) is the **PROPERTY** of Harmonic Drive Systems,Inc. and shall not be traced, otherwise copied or used for purposes other than agreed upon, nor communicated to any third party without written permission of Harmonic Drive Systems,Inc.

訂正 REV	来歴 DESCRIPTION
仕様 SPEC	(標準)

尺度 SCALE 1:1

機械加工無記号公差 GENERAL TOLERANCE	0 ~ 0.5	0.5 ~ 6	6 ~ 30	30 ~ 120	120 ~ 315	315 ~ 1000	1000 ~ 2000
	±0.05	±0.1	±0.2	±0.3	±0.5	±0.8	±1.2

備考 REMARKS : 特記無き角はCO．2以下、すみの丸みはRO．4以下

無記号表面アラサ SURFACES MARKED EXCEPT AS NOTED ▽ → ▽ 50S ▽▽ → ▽▽ 25S ▽▽▽ → ▽▽▽ 6.3S

DWG SIZE A3 | UNIT mm | THIRD ANG

設計 DESIGN	Y.MIZUTANI	Oct- 1-10
検図 VRFD	T.HAGIWARA	Oct- 1-10
承認 APPD	J.KUROGI	Oct- 1-10

タイトル TITLE ASSEMBLY DRAWING

製品名 ARTICLE CSF-14-50-2XH-F

HARMONIC DRIVE SYSTEMS | INC TOKYO JAPAN

図番 DWG No C2A2416 ー

本図は(株)ハーモニック・ドライブ・システムズの所有に係わるものです．許可なく第3者に見せたり、トレースその他の複写及び指定された用途以外には使用しないで下さい．

TP-0E3