ITEM	QTY	PART
1	1	CIRCULAR SPLINE
2	1	FLEXSPLINE
3	1	WAVE GENERATOR ASSEMBLY

REVISIONS					
REV	DCF NO.	BY	CHKD	APPD	DATE
A	ER-12-076	RELEASED TO MANUFACTURING			10/26/2012
B	14-123	WTH	RGB		5/19/2014
C	20-0741	NAN	MAG	AMM	1/12/2021

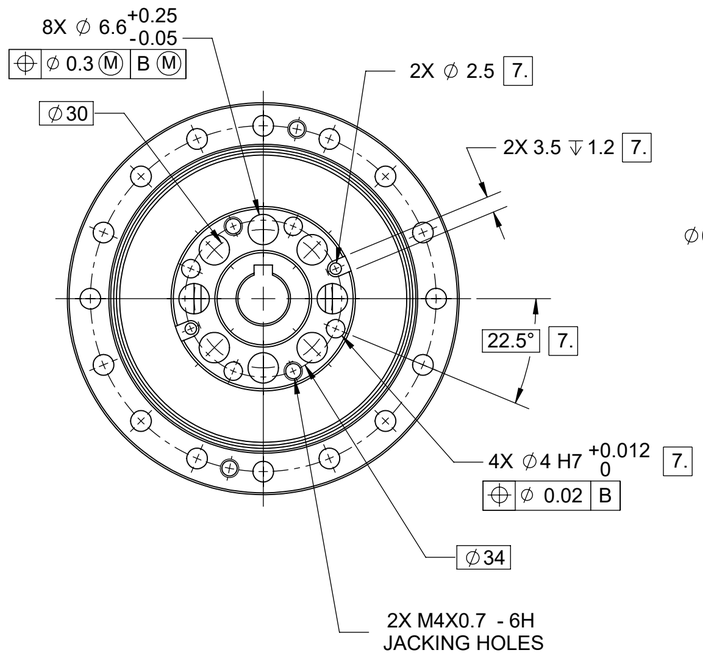

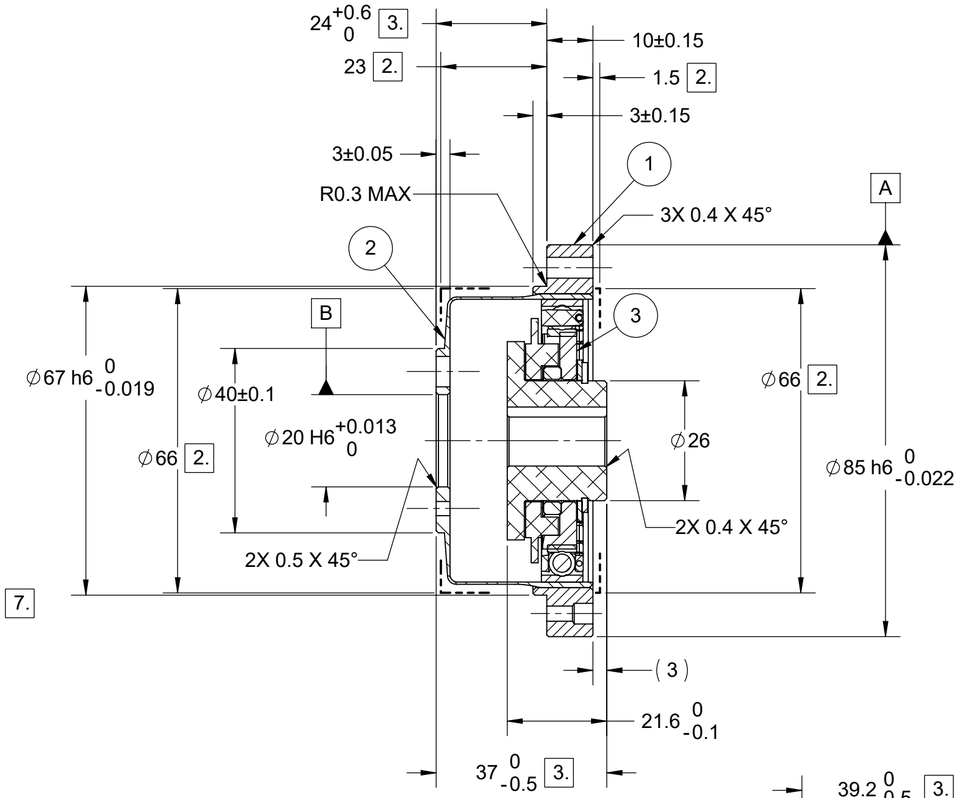

SECTION A-A

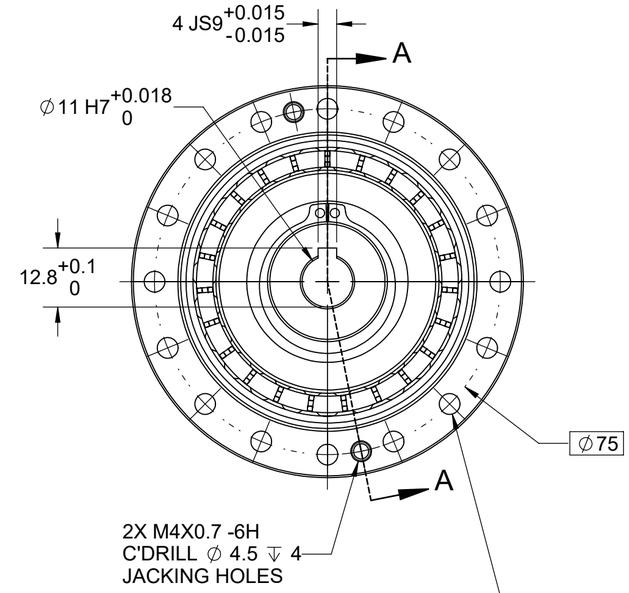

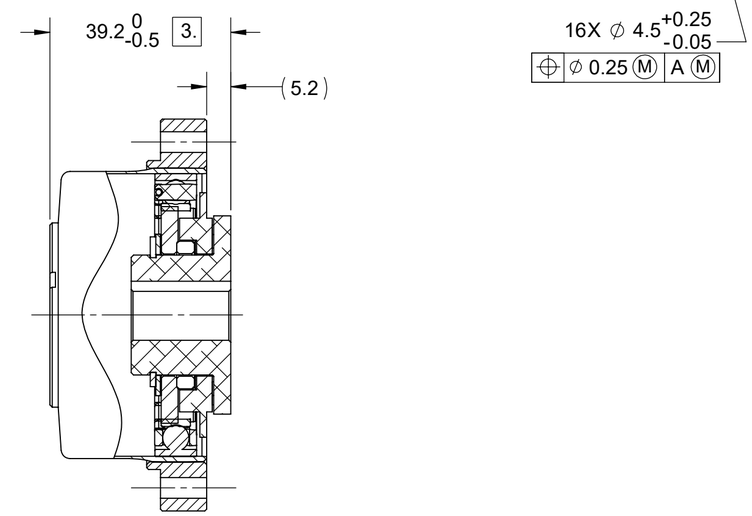

ALTERNATE W/G ORIENTATION
SCALE 1:1

NOTES:

1. DESIGN AND/OR HANDLING OF HARMONIC DRIVE PRODUCTS MUST BE IN COMPLIANCE WITH TECHNICAL INFORMATION FOUND IN HARMONIC DRIVE CATALOGS AT: WWW.HARMONICDRIVE.NET/DOWNLOADS/CATALOGS

2. MINIMUM HOUSING CLEARANCE.

3. DIMENSIONS ESTABLISH INTERFACE AND INSTALLATION REQUIREMENTS. MAINTAIN AT ASSEMBLY AND UNDER ALL OPERATING LOAD CONDITIONS.

4. ALL CIRCULAR HOLE PATTERNS ARE EQUALLY SPACED UNLESS OTHERWISE SPECIFIED.

5. MAINTAIN COMPONENTS IN "AS RECEIVED" SERIALIZED SETS.

6. CONFIGURATION IS FOR GREASE LUBRICATION ONLY. CONTACT HDLLC IF OIL LUBRICATION IS DESIRED.

7. CONFIGURATION OPTIONS PER TABLE. TO ORDER USE PART NUMBER AND DESCRIPTION FROM TABLE.

7. CONFIGURATION TABLE

PART NUMBER	DESCRIPTION	FEATURE
34-025XXXUS	CSG-25-XXX-2A-GR	STANDARD
34-025XXXAUS	CSG-25-XXX-2A-GR-IV	OIL HOLES
34-025XXXBUS	CSG-25-XXX-2A-GR-B	DOWEL HOLES
34-025XXXCUS	CSG-25-XXX-2A-GR-C	OIL AND DOWEL HOLES

PROPRIETARY AND CONFIDENTIAL
THIS DRAWING CONTAINS VALUABLE CONFIDENTIAL AND PROPRIETARY TRADE SECRET INFORMATION OF HARMONIC DRIVE LLC. COPYING, DISCLOSING, OR USING THIS INFORMATION WITHOUT THE EXPRESS WRITTEN AUTHORIZATION OF HARMONIC DRIVE LLC IS PROHIBITED.

THIRD ANGLE

THIS DOCUMENT WAS CREATED IN ACCORDANCE WITH ASME Y14.5-2018.

ALL DIMENSIONS ARE IN MILLIMETERS UNLESS OTHERWISE SPECIFIED,

DRAFTER RGB 06/21/2012	CHECKER RWC 06/21/2012
MAT'L ENG. THB 10/18/2012	DESIGN ENG.
MFG. ENG. CDM 10/16/2012	QUALITY
SIMILAR TO	

HARMONIC DRIVE®
HarmonicDrive®
42 DUNHAM RIDGE
BEVERLY MA 01915-1844
www.harmonicdrive.net

TITLE:
INSTALLATION DRAWING CSG-25-XXX-2A-GR

SIZE	CAGE CODE	DWG. NO.	REV
C	34519	1010905	C

SCALE: 1:1 SHEET 1 OF 1