Harmonic Drive LLC

Precision Actuators • Gearheads • Gearing Components

Total
Motion
Control

HARMONIC DRIVE®

Exceptional Technology for Evolving Industries

Harmonic Drive LLC engineers and manufactures precision servo actuators, gearheads and gear component sets. We work closely with companies of all sizes to understand their application requirements and provide a standard or custom-engineered solution to enable the success of their design project. Our mission is to provide motion control solutions that give our customers a competitive advantage.

With over 60 years of experience, our expert engineering and production teams develop enabling technologies and products to meet the needs of an evolving motion control market. We are very proud of our outstanding company history.

Our high-precision, zero-backlash Harmonic Drive® actuators and gears have, and continue to fulfill, critical applications for robotics, spaceflight, semiconductor manufacturing, factory automation, medical diagnostics, and surgical robotics.

C. Walt Musser Patented
Strain Wave Gearing in 1955

Harmonic Drive® High-Precision Strain Wave Gearing

Features

- Zero Backlash
- High Positioning Accuracy
- High Repeatability
- Compactness
- Light Weight
- High Reduction Ratio
- High Torque Capacity
- High Efficiency
- Quiet Operation

Structure

Utilizing a unique operating principle, the gear consists of only 3 basic parts (Wave Generator, Flexspline and Circular Spline). It provides excellent features not found in other speed reducers.

Structure of Harmonic Drive® Component Product

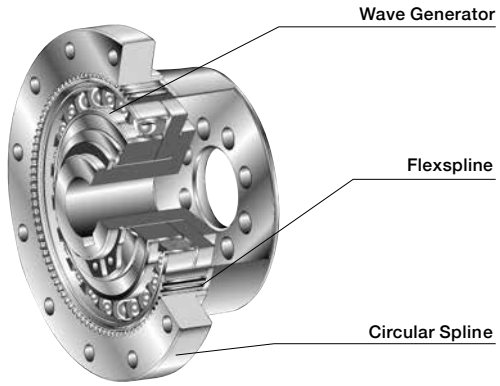

Wave Generator

The Wave Generator is a thin raced ball bearing fitted onto an elliptical hub. This serves as a high efficiency torque converter and is generally mounted onto the input or motor shaft.

Flexspline

The Flexspline is a non-rigid, thin cylindrical cup with external teeth on the open end of the cup. The Flexspline fits over the Wave Generator and takes on its elliptical shape. The Flexspline is generally used as the output of the gear.

Circular Spline

The Circular Spline is a rigid ring with internal teeth. It engages the teeth of the Flexspline across the major axis of the Wave Generator ellipse. The Circular Spline has two more teeth than the Flexspline and is generally mounted onto a housing.

Operating Principle

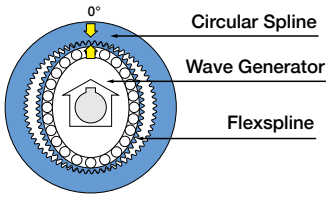

The Flexspline is slightly smaller in diameter than the Circular Spline and usually has two fewer teeth than the Circular Spline. The elliptical shape of the Wave Generator causes the teeth of the Flexspline to engage the Circular Spline at two opposite regions across the major axis of the ellipse.

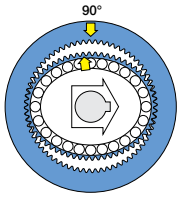

As the Wave Generator rotates the teeth of the Flexspline engage with the Circular Spline at the major axis. For every 180 degree clockwise movement of the Wave Generator the Flexspline rotates counter-clockwise by one tooth in relation to the Circular Spline.

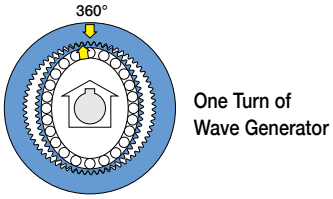

Each complete clockwise rotation of the Wave Generator results in the Flexspline moving counter-clockwise by two teeth from its original position relative to the Circular Spline.

Tooth Engagement

The strain wave gear has a unique tooth engagement which results in a zero-backlash gear mesh that provides high positional accuracy and high torque with a compact form factor.

The Harmonic Drive® strain wave gear utilizes a unique gear tooth profile for optimized tooth engagement. Unlike an involute tooth profile, which is used in conventional gears, this optimized tooth profile ("S tooth") enables about 30% of the total number of teeth to be engaged at the same time. This technological innovation results in high torque, high torsional stiffness, long life and smooth rotation.

The "S" tooth profile eliminates stress concentration by widening the tooth root and providing a large tooth root radius. This figure shows the progression of the Flexspline tooth engagement as it meshes with the teeth of the fixed Circular Spline.

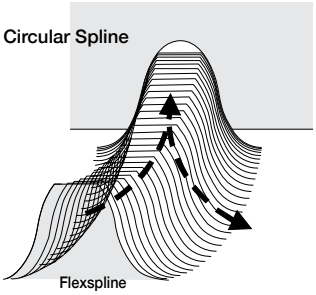

Rotary Actuators	Rotary Actuators	Model	Description	Product	Peak Torque Nm	Maximum Speed rpm	Page
Rotary Actuators	**AC Servomotors** Harmonic Drive® rotary actuators deliver both high-force and outstanding positional accuracy. Harmonic Drive manufactures our own cross-roller bearings, harmonic and planetary gearing, state-of-the-art brushless servo motors and encoders.	FHA-C Mini Integrated	Integrated, Miniature Flat		1.8~28	60~200	10
		FHA-C Mini	Miniature Flat Optional Hollow Shaft		1.8~28	60~200	14
		FHA-C	Flat Hollow Shaft		39~820	22~96	15
		FHA-C PR	Flat Hollow Shaft High Rotary Positioning		39~820	22~96	16
		FHA-C H	Flat Hollow Shaft IP 65 Rating		39~820	22~96	17
		SHA Integrated	Flat Hollow Shaft		68~477	16~75	18
		SHA-CG	Hollow Shaft Superior Rotary Positioning		23~841	25 ~120	20
		SHA-SG	Flat Hollow Shaft		26~3419	17~118	22
		FLA	Ultra-flat		1.8 ~ 34	50~500	24
		LPA Integrated	Low Profile Actuator		34~57	44~88	26
		RSF Supermini Integrated	Integrated, Ultra Compact Cylinder		0.13~1.4	100~333	12
		RSF Supermini	Ultra Compact Cylinder		1.8~28	60~200	28
		RSF mini	Compact Cylinder		34~330	45~90	29
		RSF	Compact Cylinder		1.8~4.8	85~283	30
		RSA Integrated	Integrated, Compact Rectangle		56~330	45~90	13

Rotary Actuators	Motors	Model	Description	Product	Peak Torque Nm	Maximum Speed rpm	Page
	AC Servomotors	RKF	Compact Cylinder		56~330	45~90	31

Motors	Motors	Model	Description	Product	Peak Torque Nm	Maximum Speed rpm	Page
	DC Servomotors	RH mini	Compact Cylinder		0.39~20	50~180	32
	Direct Drive Motor	KDU	Ultra Precision Direct Drive Motor		7.0~15.0	160~180	33
	Hollow Shaft Motor	HMA	Ultra Precision Hollow Shaft		1.8~33	3000~6000	34

Linear Actuators	Linear Actuators	Model	Description	Product	Maximum Driving Force N	Maximum Speed mm/s	Stroke mm	Page
	AC Servomotors	LBC	High-Force Positioning		6000~12000	10~20	50	35
	DC Servomotors	LA	Low-Force Positioning		49	0.9	10~30	36
		LAH-46	Medium-Force Positioning		392	3.7	10~30	37
	Stepper Motors	LAH-80	High-Force Positioning		3000	3000	0.9~10	37

Servo Drives	Servo Drives	Model	Description	Product	Pulse Position Command	Analog Speed Command	Mono-Shaft Control (Command)	Interface to Absolute Encoder	Interface to Incremental Encoder	Page
	DC Digital Servo Drive	DCJ Series	Multiple Operating Modes		•	•	•	–	•	38-39
		DDP Series	Multiple Operating Modes		•	•	•	–	•	38-39
	AC Digital Servo Drive	RTL Series	Multiple Communication Modes		•	•	•	–	•	38-395
		REL Series	Multiple Operating Modes		•	•	•	•	•	38-39

Fieldbus Options

Custom Actuators also available. Contact us to find out more about our Engineering Design Services.

Speed Reducers	Speed Reducers	Style	Model	Description	Product	Peak Torque Nm	Ratio	Page
Speed Reducers	**Component Gear Sets** Consisting of three basic components: flexspline, circular spline and wave generator; component gear sets offer ultimate design flexibility and can be tightly integrated in equipment sub-structures.	**Cup**	CSF-2A	Standard		1.8~9200	30:1~160:1	40
			CSG-2A	High-Torque		23~3400	50:1~160:1	41
			CSF-2A-LW	Lightweight Standard		1.8~9200	30:1~160:1	42
			CSG-2A-LW	Lightweight High-Torque		23~3400	50:1~160:1	43
			CSD-2A	Ultra-Flat		12~750	50:1~100:1	44
		Pancake	FB-2	Standard		3.2~500	50:1~160:1	45
			FR-2	High-Torque		5.4~7900	50:1~160:1	45
		Silk Hat	SHF-2A	Standard		9.0~1800	30:1~160:1	46
			SHG-2A	High-Torque		23~3400	50:1~160:1	47
	Gear Units Housed component gearing combined with precision cross roller output bearing & flange. Very compact, robust and easy to use gearhead solution.	**Cup**	CSF-2UH	Standard		9.0~2600	30:1~160:1	48
			CSF-2UH-LW	Standard, Lightweight		9.0~2600	30:1~160:1	49
			CSF-2UH-ULW	Standard, Ultra-lightweight		9.0~2600	30:1~160:1	56
			CSG-2UH	High-Torque		23~3400	50:1~160:1	50
			CSG-2UH-LW	High-Torque, Lightweight		23~3400	50:1~160:1	51

	Speed Reducers	Style	Model	Description	Product	Peak Torque Nm	Ratio	Page
Speed Reducers	**Gear Units** Housed component gearing combined with precision cross roller output bearing & flange. Very compact, robust and easy to use gearhead solution.	Cup	CSG-2UK	High-Torque, Full Unit	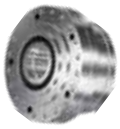	127~3400	50:1~160:1	52
			FBS-2UH	Large Hollow Shaft		25~92	30:1~50:1	53
			CSD-2UH	Ultra-Flat		12~823	50:1~120:1	54
			CSD-2UF	Ultra-Flat, Hollow Shaft		12~453	50:1~120:1	55
			CSF Mini and Supermini	Miniature Gear Unit		0.13~28	30:1~100:1	58
			CSF-2UP	Mini, Ultra-Flat		1.8~28	30:1~100:1	57
		Silk Hat	SHF-2UH	Hollow Shaft		9.0~1800	30:1~160:1	60
			SHF-2UH-LW	Hollow Shaft, Lightweight		9.0~1800	30:1~160:1	61
			SHG-2UH	High-Torque, Hollow Shaft		23~3400	50:1~160:1	62
			SHG-2UH-LW	High-Torque, Hollow Shaft, Lightweight		23~3400	50:1~160:1	63
			SHF-2UJ	Input Shaft		9.0~1800	30:1~160:1	60
			SHG-2UJ	High-torque, Input Shaft		23~3400	50:1~160:1	62
			SHD-2UH-LW	Ultra-Flat, Hollow Shaft, Lightweight		12~450	50:1~160:1	64

Speed Reducers	Speed Reducers	Style	Model	Description	Product	Peak Torque Nm	Ratio	Page
Speed Reducers	**Simplicity Gear Unit** Non-housed component gearing combined with a precision cross roller output bearing. Similar to Gear Units (above), without the housing and output flange, for tighter integration into the customer's housing or machine structure.	**Silk Hat**	SHD-2SH	Ultra-flat, Hollow Shaft		12~450	50:1~120:1	65
			SHF-2SH	Hollow Shaft		9.0~1800	30:1~160:1	66
			SHG-2SH	High-Torque, Hollow Shaft		23~3400	50:1~160:1	67
			SHF-2SO	Input Coupling		9.0~1800	30:1~160:1	66
			SHG-2SO	High-Torque, Input Coupling		23~3400	50:1~160:1	67

Speed Reducers	Speed Reducers	Style	Model	Description	Product	Peak Torque Nm	Ratio	Page
Speed Reducers	**Phase Adjustment Unit**	**Coupling Indexer**	FD	Differential		23~3400	80:1~320:1	68, 69
			FBB	1:1 Differential		28~655	80:1~160:1	70
		Differential	HDI	Manual Phase Adjuster		100~500	100:1	71

Quick Connect®	Quick Connect®	Style	Model	Description	Product	Peak Torque Nm	Ratio	Motor Capacity	Page
Quick Connect® Gearheads	Gearheads	Cup	CSF-GH	Zero Backlash, Standard		18~2600	50:1~160:1	30~5000	72
			CSG-GH	Zero Backlash, High-Torque		23~3400	50:1~160:1	30~5000	73
		Planetary Gears	HPG-A	Standard		5~3200	3:1~50:1	10~15000	74
			HPG-R	Helical		5-400	3:1~50:1	10~15000	75
			HPGP	High-Torque		12-3940	4:1~45:1	10~15000	76
			HPG -RA	Standard Right Angle		150~2200	5:1~50:1	500~8000	77
			HPN-A	Value		9~752	3:1~50:1	30~7500	78
			HPN-L	Value, Face-Mount		9~752	3:1~50:1	30~7500	79
			HPN-RA	Value, Right Angle		9~752	3:1~50:1	500~8000	80
			HPF	Hollow shaft		100~220	11:1	500~2000	81
			HPG-U1	Input Shaft		3.9~2200	3:1~50:1		82
			RK	Rack & Pinion Kit		225~1250	3:1~45:1		83

Integrated Actuators

FHA-C Mini with Integrated Servo Drive

The FHA-C mini Series is a family of extremely compact actuators that deliver high torque with exceptional accuracy and repeatability. As part of the FHA-C mini family, an integrated servo drive version utilizing CANopen® communication is now available. This evolutionary product eliminates the need for an external drive and greatly improves wiring while retaining high-positional accuracy and torsional stiffness in a compact housing.

- Actuator + Integrated Servo Drive utilizing CANopen communication
- 24VDC Nominal +7-28VDC Supply Voltage Range
- Single Cable with only 4 wires needed: CANH, CANL, +24VDC, 0VDC
- Zero Backlash
- Dual Absolute Encoders
- Panel Mount Connectors with 4 exit options
- Output Sensing Encoder 14bit (16384 cpr) resolution
- Input Sensing Encoder 15bit (32768 cpr) resolution
- Control Modes Including Torque, Velocity, and Position Control, CSP, CSV, CST
- HDL Software

FHA-C Mini with Integrated Servo Drive Series Ratings

Item		Size	FHA-8C			FHA-11C			FHA-14C		
			30	50	100	30	50	100	30	50	100
Maximum torque		Nm	1.8	3.3	4.8	4.5	8.3	11	9.0	18	28
Maximum speed		rpm	200	120	60	200	120	60	200	120	60
Torque constant		Nm/A_{rms}	0.8	1.3	2.7	0.8	1.3	2.6	0.8	1.4	2.9
Motor Maximum current		A_{rms}	3.0	3.3	2.4	7.8	8.2	5.6	14.8	16.4	12.3
Motor Allowable continuous current		A_{rms}	1.6	1.7	1.3	3.7	3.5	2.8	6	5.4	4.4
Input Power supply voltage		V	24VDC								
EMF constant		V/(rpm)	0.10	0.16	0.32	0.09	0.15	0.31	0.10	0.17	0.34
Phase resistance		Ω(20°C)	0.54			0.19			0.07		
Phase inductance		mH	0.22			0.11			0.06		
Number of poles			10								
Moment of inertia	$GD^2/4$	kgm^2	0.0036	0.0100	0.0399	0.007	0.019	0.077	0.019	0.052	0.206
Allowable moment load	Nm		15			40			75		
Moment Stiffness	Nm/rad		2×10^4			4×10^4			8×10^4		
Output shaft resolution*2	Dual ABS Motor	counts/rev	983,040	1,638,400	3,276,800	983,040	1,638,400	3,276,800	983,040	1,638,400	3,276,800
	Dual ABS Output		16,384								
One-way positioning accuracy	arc•sec		150	120	120	120	90	90	120	90	90
Enclosure*3			Totally enclosed self-cooled (IP44)								
Ambient environment specification			Use temperature: 0 to 40°C/Storage temperature: -20 to +60°C, Use humidity and storage humidity: 20 to 80%RH (non-condensing). Free from dust, dirt, metallic powder, corrosive gas, flammable gas, oil mist, and others. Avoid outdoor use or direct sunlight. Altitude: 1,000 m or less Insulation resistance. Motor insulation: 100 MΩ (500 VDC) or higher. Dielectric strength: 1500 VAC/min Insulation class: B								

1. The table shows typical output values
2. Motor ABS encoder resolutions are obtained by [motor encoder resolution] x [reduction ratio].
3. All parts, except the rotary sliding parts (oil seal), are protected against solid bodies of dimensions to 1mm, and against the water sprays. Panel mount connectors are IP68.

Dimensions

Unit: mm

Model	A	B	øC
FHA-8C	50	51.5	33.5
FHA-11C	60	56.8	41
FHA-14C	75	68	52.5

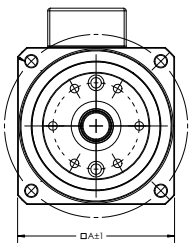

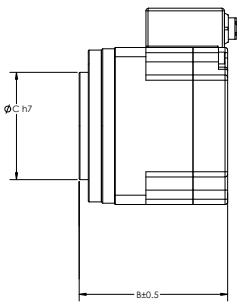

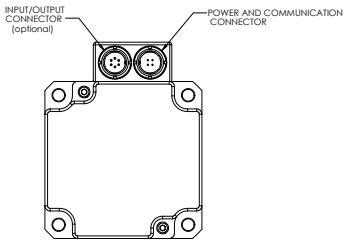

FHA-C Mini with Integrated Servo Drive

Connector(s): Panel Mount
Exit Options: PM1, PM2, PM3, PM4

Optional Connection: I/O Signal

Motor: DC Brushless

Integrated Servo Drive: CANopen 24VDC (7-28VDC)

Dual Absolute Encoders: Motor Input Encoder (15bit) & Gear Output Encoder (14bit)

Mounting Flange: Fixed

Gearhead: Harmonic Drive® CSF

Cross Roller Bearing: High moment loading capacity

Exit Options

PM1 Rear Exit

PM2 Right Exit

PM3 Left Exit

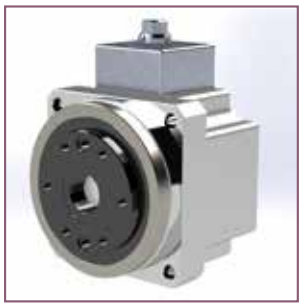

PM4 Top Exit

HDL-IDE 3.0 Software:

HDL-IDE 3.0 software provides the ability to setup or commission the FHA-C Mini Integrated actuator without connecting to a CANopen master controller. A single actuator can connect to a personal computer or laptop with a CAN communication converter and a power supply. All 256 parameters, including the tuning parameters and 256 general user variables can be set and stored to be recognized by the CANopen master controller operating the specific application.

Features

- Torque Mode and Graph
- Velocity Mode and Graph
- Position Mode and Graph
- Homing Mode
  - Limit Switch
  - Current Position
  - Hardstop Homing
- Step Response
- Bode Plot
- Parameter List
- Virtual Mode (shown)
- Common Features for all Actuators

Integrated Actuators

RSF-5B IDT Supermini Actuator with Integrated Drive

The actuator features an integrated servo drive utilizing CANopen® communication, eliminating the need for an external drive.

- Zero Backlash
- Actuator + Integrated Servo Drive utilizing CANopen® communication conforming to DS402 and DS301
- 24VDC Nominal +7 to +30VDC Supply Voltage Range
- Single Axis BLDC Motor Controller/Drive with CAN & TTL-UART Interface
- Single Cable with only 4 conductors needed: CANH, CANL, +24VDC, 0VDC
- 14bit (16384 cpr) resolution motor encoder
- Control Modes Including Torque, Velocity, and Position Control, CSP, CSV, CST
- Harmonic Drive HDL Software - for initial tuning, commissioning, and analysis

RSF-5B IDT Supermini Actuator with Integrated Servo Drive Series Ratings

Item \ Ratio			RSF-5B		
			30	50	100
Maximum torque		Nm	0.5	0.9	1.4
Allowable continuous torque		Nm	0.18	0.29	0.44
Maximum output speed		rpm	333	200	100
Allowable continuous output speed		rpm	150	90	45
Torque constant		Nm/A_{rms}	0.3	0.54	1.1
Motor maximum current		A_{rms}	2.3	2.2	1.7
Motor allowable continuous current		A_{rms}	1.11	0.92	0.76
Input power supply voltage		V	24VDC (+7 to +30VDC)		
EMF constant		V/(rpm)	0.04	0.07	0.13
Phase resistance		Ω(20°C)	0.82		
Phase inductance		mH	0.27		
Number of poles			8		
Moment of inertia	$GD^2/4$	kgm^2	7.09×10^{-5}	1.97×10^{-4}	7.88×10^{-4}
Moment Stiffness	Nm/rad		7.41×10^2		
Output shaft resolution*1	counts/rev		491,520	819,200	1,638,400
One-way positioning accuracy	arc min		4	3	3
Mass		g	77		
Enclosure			Totally enclosed self-cooled		
Ambient environment specification			Use temperature: 0 to 40°C/Storage temperature: -20 to +60°C, Use humidity and storage humidity: 20 to 80%RH (non-condensing). Free from dust, dirt, metallic powder, corrosive gas, flammable gas, oil mist, and others. Avoid outdoor use or direct sunlight. Altitude: 1,000 m or less. Motor insulation: 100 MΩ (500 VDC) or higher. Dielectric strength: 1500 VAC/1 min. Insulation class: B		
Mounting direction			Can be installed in any direction		

* The table shows typical output values.
1. Motor ABS encoder resolutions are obtained by [motor encoder resolution] x [reduction ratio].

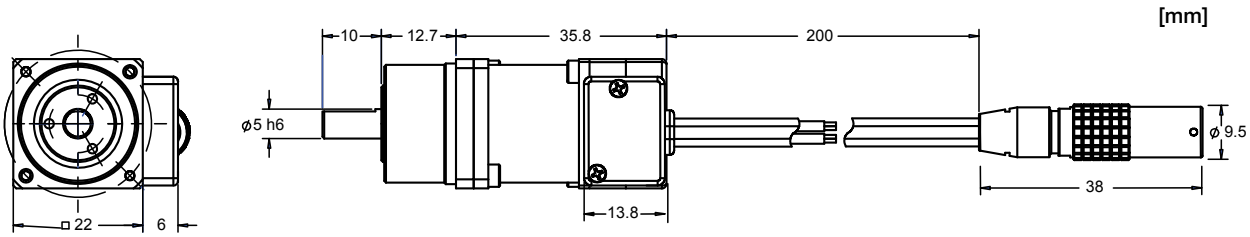

RSA-8A IDT Mini Actuator with Integrated Drive

The actuator features an integrated servo drive utilizing CANopen® communication, eliminating the need for an external drive.

- Zero Backlash
- Actuator + Integrated Servo Drive utilizing CANopen® communication conforming to DS402 and DS301
- 24VDC Nominal +7 to +30VDC Supply Voltage Range
- Single Axis BLDC Motor Controller/Drive with CAN & TTL-UART Interface
- Single Cable with only 4 conductors needed: CANH, CANL, +24VDC, 0VDC
- 14bit (16384 cpr) resolution motor encoder
- Control Modes Including Torque, Velocity, and Position Control, CSP, CSV, CST
- Harmonic Drive HDL Software - for initial tuning, commissioning, and analysis

RSA-8A IDT Mini Actuator with Integrated Servo Drive Series Ratings

Item		Ratio	RSA-8A		
			30	50	100
Maximum torque		Nm	1.8	3.3	4.8
Allowable continuous torque		Nm	0.7	1.2	2.0
Maximum output speed		rpm	283.3	170.0	85.0
Allowable continuous output speed		rpm	116.7	70.0	35.0
Torque constant		Nm/A_{rms}	0.7	1.2	2.0
Motor maximum current		A_{rms}	4.0	4.0	3.5
Motor allowable continuous current		A_{rms}	2.05	2.0	1.7
Input power supply voltage		V	24VDC (+7 to +30VDC)		
EMF constant		V/(rpm)	0.051	0.085	0.170
Phase resistance		Ω(20°C)	0.8		
Phase inductance		mH	0.285		
Number of poles			14		
Moment of inertia	$GD^2/4$	kgm^2	$7.74x10^{-4}$	$2.15x10^{-3}$	$8.60x10^{-3}$
Allowable moment load	Nm		3.46		
Moment Stiffness	Nm/rad		2.76×10^3		
Output shaft resolution*1	counts/rev		491,520	819,200	1,638,400
One-way positioning accuracy	arc min		2	2	2
Mass		g	200 (190 with F option)		
Enclosure			Totally enclosed self-cooled		
Ambient environment specification			Use temperature: 0 to 40°C/Storage temperature: -20 to +60°C, Use humidity and storage humidity: 20 to 80%RH Free from dust, dirt, metallic powder, corrosive gas, flammable gas, oil mist, and others. Avoid outdoor use or direct sunlight. Altitude: 1,000 m or less. Motor insulation: 100 MΩ (500 VDC) or higher. Dielectric strength: 1500 VAC/1 min. Insulation class: B		
Mounting direction			Can be installed in any direction		

* The table shows typical output values.
1. Motor ABS encoder resolutions are obtained by [motor encoder resolution] x [reduction ratio].

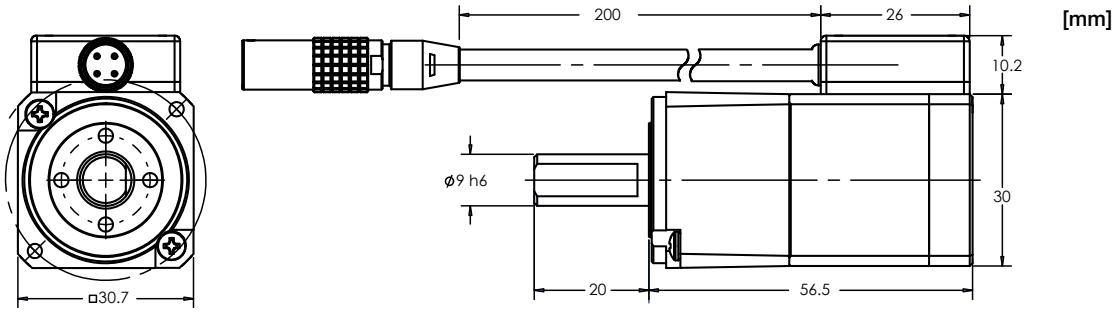

Mini Brushless Actuators

FHA-C Mini Series

These servo actuators utilize Harmonic Drive® precision gears combined with a performance matched brushless servomotor and incremental encoder. The cube shaped form factor is very compact and features a through hole in the center of the shaft (incremental encoder version only).

The FHA-mini series is designed to operate with a wide range of third-party drives, as well as Harmonic Drive LLC's DDP Series and DCJ Series.

- Large center through hole (incremental version only)
- Compact design
- Body width from 50 mm to 75 mm
- Body length from 48.5 mm to 78 mm
- **NEW Option!** A pair of Single Turn Absolute Encoders for Input and Output Sensing
- **NEW Option!** Panel mount connectors

FHA-C Mini Series Ratings

Item \ Size/Ratio				FHA-8C			FHA-11C			FHA-14C		
				30	50	100	30	50	100	30	50	100
Maximum Torque *2		Nm		1.8	3.3	4.8	4.5	8.3	11	9.0	18	28
Max. Rotational Speed		rpm		200	120	60	200	120	60	200	120	60
Torque Constant		100V/200V	Nm/A_{rms}	3.9	6.7	14	3.8	6.6	13	4.2	7.2	15
		24V	Nm/A_{rms}	0.8	1.3	2.7	0.8	1.3	2.6	0.8	1.4	2.9
Maximum Current *2		100V/200V	A_{rms}	0.61	0.64	0.48	1.5	1.6	1.1	2.9	3.2	2.4
		24V	A_{rms}	3.0	3.3	2.4	7.8	8.2	5.6	14.8	16.4	12.3
Moment of Inertia *3	INC	$GD^2/4$	kgm^2	0.0026	0.0074	0.029	0.0060	0.017	0.067	0.018	0.050	0.20
	ABS	$GD^2/4$	kgm^2	0.0026	0.0073	0.029	0.0062	0.017	0.069	0.019	0.054	0.215
	Dual ABS	$GD^2/4$	kgm^2	0.0036	0.0100	0.0399	0.007	0.019	0.077	0.019	0.052	0.206
Allowable Moment Load		Nm		15			40			75		
Moment Stiffness		Nm/rad		2×10^4			4×10^4			8×10^4		
Encoder resolution of output shaft *4	INC	counts/revolution		240,000	400,000	800,000	240,000	400,000	800,000	240,000	400,000	800,000
	ABS	counts/revolution		3,932,160	6,553,600	13,107,200	3,932,160	6,553,600	13,107,200	3,932,160	6,553,600	13,107,200
	Dual ABS Motor	counts/revolution		491,520	819,200	1,638,400	491,520	819,200	1,638,400	491,520	819,200	1,638,400
	Dual ABS Output	counts/revolution		16,384	16,384	16,384	16,384	16,384	16,384	16,384	16,384	16,384
Input Power Supply		V		24VDC or 100VAC or 200VAC								
Mass	INC	kg		0.40			0.62			1.2		
	ABS	kg		0.50			0.75			1.3		
	Dual ABS	kg		0.40			0.62			1.2		
Protection Structure				Totally enclosed self-cooled type								
Environmental Conditions				Operating temperature 0 to 40°C, storage temperature -20 to 60°C Operating humidity / storage humidity 20 to 80% RH (Do not expose to condensation) No dust, no metal powder, no corrosive gas, no inflammable gas and no oil mist Indoor use only No exposure to direct sunshine Altitude 1000m or less Insulation resistance 100M ohm or higher (DC500V), dielectric strength AC1500V/1 min, insulation class B Absolute encoder Anti-magnetism noise: 0.01 tesla								
Mounting Direction				All directions								
Compatible Drives		Incremental (14 wire)	24VDC	DCJ-055-09, DDP-090-09			DCJ-055-18, DDP-090-18			DDP-090-36		
				HA-680-4-24						HA-680-6-24		
			100V/200VAC	RTL-230-18, REL-230-18								
				HA-800-1								
		Incremental (4 wire serial)	100V/200VAC	REL-230-18								
		Single ABS	100V/200VAC	REL-230-18								
		Dual ABS	24VDC	BEL or BPL-06			BEL or BPL-14			BEL or BPL-30		

* 1: The figures in the table are those at the output shaft.
* 2: Values in combination with HA-800, HA-680, or HA-690 servo drive.
* 3: The inertia moment is the value converted to the output shaft from the total value of the inertia moments of the motor shaft and the Harmonic Drive® gear.
* 4: Output resolution for incremental encoder is calculated by (Motor shaft encoder resolution) x 4 x (Reduction ratio) and for absolute encoder, it is calculated by (Motor shaft encoder resolution) x (Reduction ratio).
* 5: Please check the actuator rotation direction in our technical data sheet.
NOTE: (INC indicates incremental encoder, ABS indicates absolute encoder, and Dual ABS indicates dual absolute encoders.)

Dimensions

Unit: mm

Model	A	B (INC)	B (ABS)	B (Dual ABS)	øC	øD*
FHA-8C	50	48.5	61.8	49	33.5	6.2
FHA-11C	60	56	68.5	55.5	41	8
FHA-14C	75	66	78	65.5	52.5	13.5

*incremental encoder version only

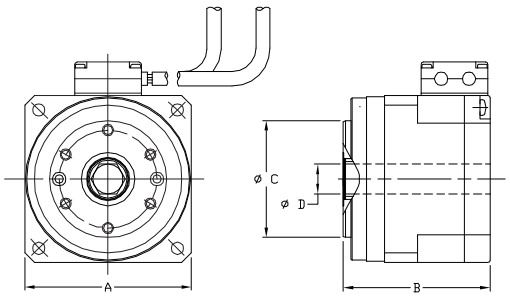

FHA-C Series

These servo actuators utilize Harmonic Drive® precision gears combined with a performance matched brushless servo motor and incremental encoder. The FHA has a low profile form factor and features a hollow shaft through the center of the output. This hollow shaft feature may be used to pass cables, tubing or a laser beam through the axis of rotation.

The FHA series is designed to operate with a wide range of third-party drives, as well as Harmonic Drive LLC's DDP Series and RTL Series.

- High torque
- Large center through hole
- Compact cylindrical design
- New ratios, 80:1 and 120:1 added

FHA-C Series Ratings

Item \ Model		FHA-17C-□□-US250					FHA-25C-□□-US250				
Reduction ratio		50	80	100	120	160	50	80	100	120	160
Maximum torque *1	Nm	39	51	57	60	64	150	213	230	247	260
Continuous torque *1*2	Nm	15	20	24	24	24	35	53	75	85	85
Maximum speed *1	rpm	96	60	48	40	30	90	56	45	37	28
Maximum current *1	A_{rms}	2.1	1.7	1.6	1.4	1.1	7.3	6.4	5.6	5.0	4.0
Continuous current *1*2	A_{rms}	0.93	0.82	0.74	0.63	0.51	2.1	2.1	2.1	2.0	1.6
Moment of inertia ($GD^2/4$)	kgm^2	0.17	0.43	0.67	0.97	1.7	0.81	2.1	3.2	4.7	8.3
Allowable moment load	Nm	188					370				
Moment stiffness	Nm/rad	220×10^3					490×10^3				
One-way positional accuracy	arc•sec	60	40	40	40	40	40	30	30	30	30
Encoder resolution of output shaft*4	counts/ revolution	500,000	800,000	1,000,000	1,200,000	1,600,000	500,000	800,000	1,000,000	1,200,000	1,600,000
Weight	kg	2.5					4.0				
Combined drive		HA-800-3C-200									

Item \ Model		FHA-32C-□□-US250					FHA-40C-□□-US250				
Reduction ratio		50	80	100	120	160	50	80	100	120	160
Maximum torque *1	Nm	281	364	398	432	453	500	659	690	756	820
Continuous torque *1*2	Nm	60	95	130	155	200	85	145	190	225	300
Maximum speed *1	rpm	80	50	40	33	25	70	43	35	29	22
Maximum current *1	A_{rms}	11.4	9.2	8.0	7.4	5.9	17.3	14.0	11.8	10.9	9.0
Continuous current *1*2	A_{rms}	3.1	3.1	3.1	3.1	3.0	4.0	4.0	4.0	3.9	3.8
Moment of inertia ($GD^2/4$)	kgm^2	1.8	4.5	7.1	10.2	18.1	4.9	12.5	19.5	28.1	50
Allowable moment load	Nm	530					690				
Moment stiffness	Nm/rad	790×10^3					1400×10^3				
One-way positional accuracy	arc•sec	40	30	30	30	30	40	30	30	30	30
Encoder resolution of output shaft*4	counts/ revolution	500,000	800,000	1,000,000	1,200,000	1,600,000	500,000	800,000	1,000,000	1,200,000	1,600,000
Weight	kg	6.5					12				
Combined drive		HA-800-6C-200									

The values in the table above show typical values for the output shaft.
*1: Typical values when used with HA-800 drive (driven with the ideal sine wave). (Ambient temperature: 25°C)
*2: The values for saturated temperature were obtained when installed on an aluminum heatsink (17C: □300 x 15t, 25C: □350 x 18t, 32C: □400 x 20t, 40C: □500 x 25t [mm])
*3: The values of the moment of inertia and weight were obtained while the product is not equipped with a brake.
*4: The output axis resolution is obtained by (Motor shaft encoder resolution multiplied by four) x (Reduction ratio).

Dimensions

Unit: mm

Size Symbol	FHA-17C	FHA-25C	FHA-32C	FHA-40C
øA	128	155	175	230
øB	70	85	105	130
øC	18	32	35	45
D	21	25	22	30
E	78	90.5	111.5	127

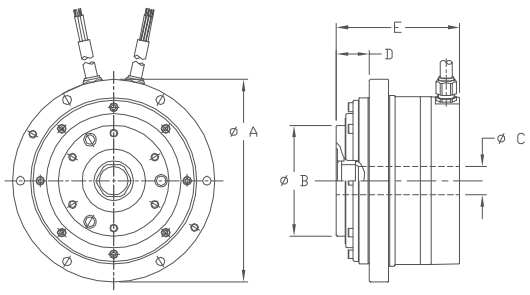

Hollow Shaft Brushless Actuators

FHA-C-PR Series

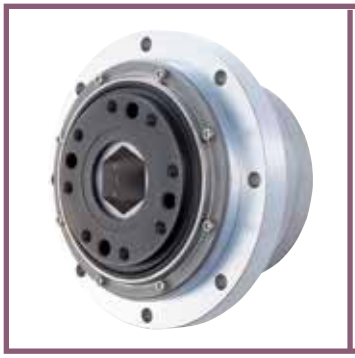

FHA-C-PR features improved one way and bi-directional positioning repeatability and is ideal for high-precision rotary positioning. These servo actuators utilize Harmonic Drive® precision gears combined with a performance matched brushless servo motor and incremental encoder. The FHA has a low profile form factor and features a hollow shaft through the center of the output. This hollow shaft feature may be used to pass cables, tubing or a laser beam through the axis of rotation.

The FHA series is designed to operate with a wide range of third-party drives, as well as Harmonic Drive LLC's DDP Series and RTL Series.

- High torque
- Large center through hole
- Compact cylindrical design
- Improved one-way and bi-directional repeatability

FHA-C-PR Series Ratings

			FHA-17C-xx-US250-PR					FHA-25C-xx-US250-PR					FHA-32C-xx-US250-PR					FHA-40C-xx-US250-PR				
			50	80	100	120	160	50	80	100	120	160	50	80	100	120	160	50	80	100	120	160
Maximum torque *1		N•m	39	51	57	60	64	150	213	230	247	260	281	364	398	432	453	500	659	690	756	820
Maximum speed *1		rpm	96	60	48	40	30	90	56	45	37	28	80	50	40	33	25	70	43	35	29	22
Torque constant *1	200 V	N•m/A_{rms}	21	33	42	50	67	22	36	45	54	72	27	43	54	64	86	31	51	64	76	102
	100 V	N•m/A_{rms}	11	17	21	25	33	11	17	22	26	36	16	26	33	39	52	-	-	-	-	-
Maximum Current *1	200 V	A_{rms}	2.1	1.7	1.6	1.4	1.1	7.3	6.4	5.6	5.0	4.0	11.4	9.2	8.0	7.4	5.9	17.3	14.0	11.8	10.9	9.0
	100 V	A_{rms}	4.2	3.4	3.2	2.7	2.2	15	13	11	10	8.0	18	16	16	12	12	-	-	-	-	-
EMF voltage constant	200 V	V/(rpm)	2.3	3.7	4.7	5.6	7.5	2.5	4.1	5.1	6.1	8.1	3.0	4.8	5.9	7.2	9.5	3.6	5.7	7.2	8.6	11.4
	100 V	V/(rpm)	1.2	1.9	2.4	2.8	3.8	1.3	2.0	2.6	2.9	4.1	1.5	2.9	3.0	4.4	4.8	-	-	-	-	-
Phase resistance	200 V	Ω (20°C)	7.9					2.6					1.0					0.73				
	100 V	Ω (20°C)	2.0					0.65					0.25					-				
Phase inductance	200 V	mH	6.0					2.6					1.3					1.5				
	100 V	mH	1.5					0.65					0.33					-				
Moment of Inertia	(GD^2/4)	kg•m^2	0.21	0.53	0.83	1.2	2.1	0.90	2.3	3.5	5.2	9.2	2.1	5.3	8.2	12	21	5.5	14	22	32	56
Allowable radial load		kN	2.9					4.9					9.5					14.7				
Allowable axial load		kN	9.8					14.7					24.5					39.2				
Max. moment capacity		N•m	188					370					530					690				
Moment stiffness		N•m/rad	220 x 10^3					490 x 10^3					790 x 10^3					1400 x 10^3				
One-way positioning accuracy		arc•sec	60	40	40	40	40	40	30	30	30	30	40	30	30	30	30	40	30	30	30	30
One-way repeatability		arc•sec	±5					±5					±4					±4				
Bi-directional repeatability		arc•sec	75	30	30	30	30	60	25	25	25	25	50	20	20	20	20	50	20	20	20	20
Motor encoder			2500 pulse/revolution																			
Quad encoder resolution*2		counts/rev	500000	800000	1000000	1200000	1600000	500000	800000	1000000	1200000	1600000	500000	800000	1000000	1200000	1600000	500000	800000	1000000	1200000	1600000
Mass		kg	2.8					4.7					7.1					13.6				

The values in the table above show typical values for the output shaft.
*1: They are typical characteristics in the case of combinations with our drive (driven with the ideal sine wave). (Ambient temperature: 25°C)
*2: The output axis resolution is obtained by (Motor shaft encoder resolution multiplied by four) x (Reduction ratio).

Dimensions

Unit: mm

Size Symbol	FHA-17C	FHA-25C	FHA-32C	FHA-40C
øA	128	155	175	230
øB	70	85	105	130
øC	18	32	35	45
D	35	44.3	46	58.5
E	92/107.5*	109.8/129.3*	135.5/156*	155.5/176.5*

* with brake

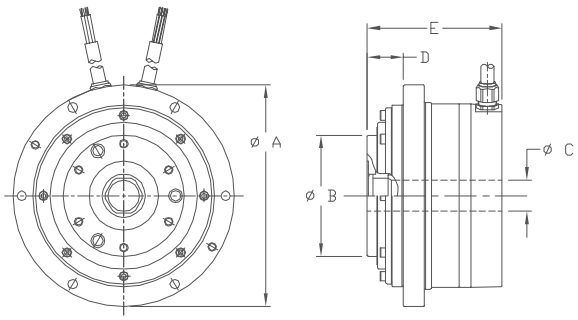

FHA-C-H Series

FHA-C Series servo actuators are now available with IP65 protection. Four sizes are available: 17, 25, 32 and 40. The IP65 rated FHA-C actuator is ideal for harsh environments. With IP65 and 480V, the FHA actuator is well suited for machine tool, packaging, and wash-down applications.

- High torque
- Large center through hole
- Compact cylindrical design
- IP65 Rating
- 480VAC*
- EnDat® & HIPERFACE® Encoder Protocols
- DESINA style flex rated cables

* Contact us for additional voltage options.

FHA-C-H Series Ratings

Item \ Model		Symbol	FHA-17C-H (Bus voltage 680VDC)			FHA-25C-H (Bus voltage 680VDC)			FHA-32C-H (Bus voltage 680VDC)			FHA-40C-H (Bus voltage 680VDC)		
Ratio			50	100	160	50	100	160	50	100	160	50	100	160
Maximum Torque	N•m	TM	39	57	64	151	233	261	281	398	453	500	686	823
Maximum Current	A_{rms}	IM	1.4	1.1	0.8	3.9	3	2.2	6.5	4.7	3.5	9.3	6.4	5.0
Continuous Torque	N•m	TC	15	23	23.2	40	72	90	60	153.5	240	90	234	400
Continous Current	A_{rms}	IC	0.65	0.55	0.45	1.3	1.3	1.25	2	2	1.9	2.4	2.4	2.4
Maximum Speed	rpm	NM	96	48	30	90	45	28.1	80	40	25	70	35	21.9
Torque Constant	N•m/A_{rms}	KT	37	75	120	42	86	138	49	100	160	59	120	193
Motor EMF Constant (Line-Line)	V_{rms}/(krpm)	V_{EMF}	50			57			67			80		
	V_{rms}/(rad/s)		0.48			0.55			0.64			0.77		
Phase Resistance (20°C, Line-Line)	Ω	R	64			22.4			7.8			5.6		
Phase Inductance (Line-Line)	mH	L	42			20			9.8			11.2		
Number of Pole Pairs	p	P	6			6			6			6		
Allowable Axial Load	kN	LA	9.8			14.7			24.5			39.2		
Allowable Radial Load	kN	LR	2.9			4.9			9.5			14.7		
Allowable Moment Load	Nm	LM	188			370			530			690		
Moment Stiffness	N•m/rad		220×10^3			490×10^3			790×10^3			1400×10^3		
One-Way Positional Accuracy	arc•sec		60	40	40	40	30	30	40	30	30	40	30	30
Feedback Type*1			Single-turn absolute (EnDat and HIPERFACE) Multi-turn absolute (EnDat)											
Mass	kg	M	3.3			4.6			6.8			10.8		
Mass (with brake)			3.7			5.4			7.7			12.8		

The table shows typical values. *1 Refer to manual for details. *2 Inertia shown in this table is at input side. To convert to output side, multiply the inertia by (ratio)^2

Dimensions

Unit: mm

Size Symbol	FHA-17C-H	FHA-25C-H	FHA-32C-H	FHA-40C-H
øA	18	32	35	45
øB	105	125	140	185
øC	128	155	175	230
D	12	15	18	22
E	105.5/121*	106.5/132.5*	129/155*	143.8/165*

* with brake

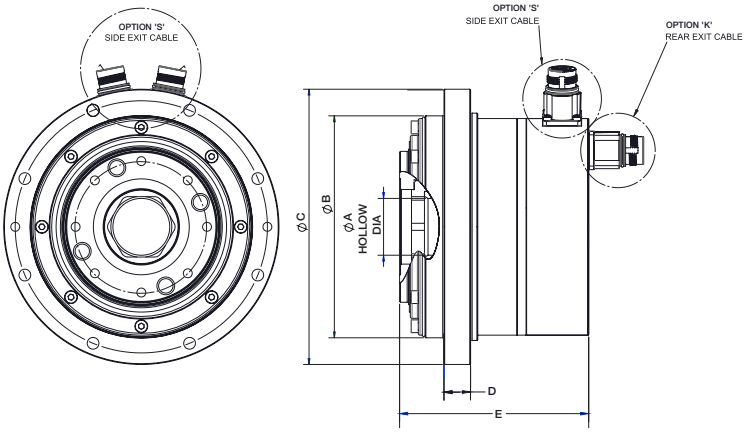

Hollow Shaft Brushless Actuators

SHA IDT with Integrated Servo Drive

The SHA servo actuators feature high precision Harmonic Drive® gearing combined with a brushless servo motor, a brake option, magnetic dual absolute encoders and an Integrated Servo Drive with CANopen® or EtherCAT® communication options. This revolutionary product eliminates the need for an external drive and greatly simplifies cabling yet delivers high-positional accuracy and torsional stiffness in a compact housing.

- Compact design, Large center through hole
- EtherCAT and CANopen options
- Zero Backlash
- Dual Absolute Encoders
- Output Sensing Encoder 16bit (65,536 cpr) resolution
- Input Sensing Encoder 17bit (131,072 cpr) resolution

SHA IDT Ratings

Item \ Size			SHA 20A					SHA 25A					SHA 32A				
			51	81	101	121	161	51	81	101	121	161	51	81	101	121	161
Maximum torque		Nm	68	96	107	113	120	100	163	204	217	229	146	238	298	357	477
Maximum speed		rpm	63	40	32	27	20	75	47	38	32	24	50	31	25	21	16
Maximum current		A_{rms}	14.9	13.2	12	10.8	9.1	25.5	25.5	25.5	23.2	19	25.5	25.5	25.5	25.5	25.5
Continuous torque[1]		Nm	16	26.6	33.4	40.2	48	28	46	57	69	81	37	61	77	93	126
Continuous speed[1]		rpm	49	32.4	26	21.9	17.1	51	35	28.2	23	15	47.2	30	24	20	15
Continuous current		A_{rms}	4.7	4.7	4.7	4.7	4.4	8.5	8.5	8.5	8.5	7.8	8.5	8.5	8.5	8.5	8.5
Torque constant		Nm/A	6.3	10.1	12.7	15.2	20.2	5.3	8.5	10.6	12.7	16.9	7.9	12.8	15	19.1	25.4
Moment of inertia with brake		kgm^2	0.2	0.6	0.9	1.3	2.3	0.6	1.6	2.5	3.6	5.4	2.2	5.6	8.7	12.5	22.2
Moment of inertia without brake		kgm^2	0.2	0.5	0.8	1.2	2.0	0.5	1.4	201	3.0	6.4	1.9	4.8	7.5	10.8	19.1
Allowable moment load			187					258					580				
Moment stiffness			25.2×10^4					39.2×10^4					100×10^4				
Output bearing basic dynamic rated load		kN	14.6					21.8					38.2				
Encoder type		–	Dual magnetic absolute					Dual magnetic absolute					Dual magnetic absolute				
Motor encoder resolution		–	2^{17} (131072)					2^{17} (131072)					2^{17} (131072)				
Gear encoder resolution		–	2^{16} (65536)					2^{16} (65536)					2^{16} (65536)				
Mass		kg	2.1					3.3					PM1: 6.3, PM4: 6.4				
Operating voltage		V	48 (24-60)					48 (24-60)					48 (24-60)				
Communication protocol		–	CANopen® (DS301/DS402), EtherCAT®					CANopen® (DS301/DS402), EtherCAT®					CANopen® (DS301/DS402), EtherCAT®				
Environmental[4]	Ambient operating temp	°C	0-40 (-20-60 storage)					0-40 (-20-60 storage)					0-40 (-20-60 storage)				
	Operating humidity	%RH	20-80 (no condensation)					20-80 (no condensation)					20-80 (no condensation)				
	Vibration resistance[3]	m/s^2	25					25					25				
	Shock resistance[3]	m/s^2	300					300					300				
	Max operating altitude	m	1000 above sea level					1000 above sea level					1000 above sea level				
	No dust, no metal powder, no corrosive gas, no flammable gas, no oil mist, Indoor use only, refer to standard SHA manual for more information																

1. Value after temperature rise and saturation when the recommended aluminum heatsink is installed.
2. Value of phase induced voltage constant multiplied by 3.
3. For testing conditions, refer to [1-12 Shock resistance] (P1-41) and [1-13 Resistance to vibration] (P1-42) of SHA manual. Motor operation is not guaranteed in applications where vibrations and impacts are continuously applied for a long period of time.
4. For details. refer to [3-3 Location and installation] (P3-6) of SHA manual.

SHA IDT with Integrated Servo Drive

SHA IDT Ratings

Item \ Size	SHA 20A					SHA 25A					SHA 32A				
	51	81	101	121	161	51	81	101	121	161	51	81	101	121	161
Motor insulation	Insulation resistance: 100MΩ or more (by DC500V insulation tester), Dielectric strength: AC1500v/1 min Insulation class: A														
Mounting direction	Can be installed in any direction														
Recommended heatsink size [mm][1]	SHA 20: 320 X 320 X 16 mm SHA 25: 350 X 350 X 18 mm SHA 32: 400 X 400 X 20 mm														

1. Value after temperature rise and saturation when the recommended aluminum heatsink is installed.
2. Value of phase induced voltage constant multiplied by 3.
3. For testing conditions, refer to [1-12 Shock resistance] (P1-41) and [1-13 Resistance to vibration] (P1-42) of SHA manual. Motor operation is not guaranteed in applications where vibrations and impacts are continuously applied for a long period of time.
4. For details. refer to [3-3 Location and installation] (P3-6) of SHA manual.

SHA with Integrated Servo Drive Features

Mounting Flange: Fixed

Cross Roller Bearing: High Moment Loading Capacity

Gearhead: Harmonic Drive® SHA

Hollow Shaft: Standard

Connector(s): Panel Mount
Exit Options: PM1, PM4

Optional Connection: I/O & MTO

Integrated Servo Drive: CANopen® 48VDC (24-60VDC), EtherCAT®

Dual Absolute Encoders: Motor Input Encoder (17bit), Gear Output Encoder (16bit)

Brake: with or without Brake

Motor: DC Brushless

Model	SHA Integrated Series
Size	20, 25, 32
Design Version	A
Gear Ratio	51, 81, 101, 121, 161
Gearhead	Harmonic Drive® SG Series
Motor Version	B
Motor Size	08: SHA 20 09: SHA 25 12: SHA 32

Brake	A: Without brake B: With brake
Voltage Rating	LV: 48VDC (24-60VDC)
Encoder and Resolution	IDT17b16b - Integrated Drive Motor Input Encoder (17bit) Gear Output Encoder (16bit)
Options	PM1 – Axial Exit PM4 – Radial Exit
I/O Connection Signal	Blank: CANopen® Option S: CANopen® with IO Option E: EtherCAT® Option ES: EtherCAT® with IO Option
Special Specifications	Blank: Standard product SP: Special-specification code

EtherCAT Conformance tested

Hollow Shaft Brushless Actuators

SHA-CG Series

SHA-CG high precision actuators are a great alternative for direct drive motors. SHA-CG actuators offer direct drive motor performance in a compact, significantly lighter package. The SHA-CG offers improved rotary positioning accuracy and a high precision output with surface runout less than 10 microns.

- Alternative to Direct Drive Motors
- High Accuracy Output Bearing
- Available with Mounting Base
- High Torque
- Hollow Shaft Design
- Compact
- Available in 4 sizes

SHA-CG Series Ratings

Item \ Model		SHA20A					SHA25A (Motor voltage 100V)					SHA25A (Motor voltage 200V)				
Ratio		50	80	100	120	160	50	80	100	120	160	50	80	100	120	160
Maximum Torque*1	N•m	73	96	107	113	120	127	178	204	217	229	127	178	204	217	229
	in-lb	642	850	947	100	1062	1124	1575	1805	1920	2027	1124	1575	1805	1920	2027
Maximum Rotational Speed	rpm	120	75	60	50	37.5	96	60	48	40	30	112	70	56	46.7	35
Torque Constant	$N•m/A_{rms}$	16	26	33	39	53	10.9	17.7	22	27	35	19	31	38	46	61
Maximum Current*1	A_{rms}	6.1	5	4.6	4.1	3.4	15.1	13.2	12.2	11	9	8.7	7.6	7	6.3	5.2
Moment of Inertia $GD^2/4$ (without brake) J	$kg•m^2$	0.21	0.53	0.82	1.2	2.1	0.5	1.3	2	2.9	5.1	0.5	1.3	2	2.9	5.1
	$kgf•cm•s^2$	2.1	5.4	8	12	22	5.1	13	20	29	52	5.1	13	20	29	52
Moment of Inertia $GD^2/4$ (with brake) J	$kg•m^2$	0.23	0.6	0.94	1.3	2.4	0.6	1.5	2.4	3.4	6.1	0.6	1.5	2.4	3.4	6.1
	$kgf•cm•s^2$	2.4	6.1	9.6	14	24	6.1	16	24	35	62	6.1	16	24	35	62
One-Way Positioning Accuracy	arc•sec	60	50	50	50	50	50	40	40	40	40	50	40	40	40	40
Allowable Moment Load	N•m	187					258									
Moment Stiffness	N•m/rad	$25.2×10^4$					$39.2×10^4$									
Output Resolution	Counts/ Revolution	6,553,600	10,485,760	13,107,200	15,728,640	20,971,520	6,553,600	10,485,760	13,107,200	15,728,640	20,971,520	6,553,600	10,485,760	3,107,200	15,728,640	20,971,520
Power Supply*2	V	200VAC					100VAC					200VAC				
Mass (without brake)	kg	2.6					3.95									
Mass (with brake)	kg	2.7					4.1									
Protection Structure		Enclosed, self-cooled (IP54)														
Environmental Conditions		Operating temperature: 0 to 40°C • Storage temperature: -20 to +60°C. Operating and storage humidity: 20 to 80% RH (No condensation permitted). Vibration resistance : $25m/s^2$ (frequency: 10 to 400Hz) • Shock resistance: $300m/s^2$. Indoor installation: No dust, no metal powder, no corrosive gas, no inflammable gas, no oil mist, no other foreign matter and no direct sunshine. Altitude 1000m or less. Insulation resistance: 100MΩ or higher (DC 500V). Dielectric strength: AC 1500V/1min. Insulation class: Class E														
Recommended Drive		REL-230-18, HA-800-3D/E-200					REL-230-18, REL-230-36, HA-800-6D/E-100*1					REL-230-18, REL-230-36, HA-800-3D/E-200				
Encoder Type		Magnetic absolute encoder					Magnetic absolute encoder									

The table shows typical output values of actuators.
*1 Typical specifications when combined with our drives.
*2 Low voltage option available for sizes 20, 25 and 32.

SHA-CG Series Ratings

Item \ Model		SHA32A					SHA40A				
Ratio		50	80	100	120	160	50	80	100	120	160
Maximum Torque*1	N•m	281	395	433	459	484	523	675	738	802	841
	in-lb	2487	3496	3832	4062	4283	4629	5974	6531	7098	7443
Maximum Rotational Speed	rpm	96	60	48	40	30	80	50	40	33.3	25
Torque Constant	$N•m/A_{rms}$	20	33	41	49	66	25	40	50	60	80
Maximum Current*1	A_{rms}	17.7	15.4	13.7	12.2	10	27.2	22	19.6	18	14.7
Moment of Inertia $GD^2/4$ (without brake) J	$kg•m^2$	1.7	4.3	6.7	9.7	17	4.8	12	19	27	49
	$kgf•cm•s^2$	17	44	68	99	175	49	124	194	280	497
Moment of Inertia $GD^2/4$ (with brake) J	$kg•m^2$	2	5.1	7.9	11	20	5.8	15	23	33	59
	$kgf•cm•s^2$	20	52	81	116	207	59	150	235	338	601
One-Way Positioning Accuracy	arc•sec	40	30	30	30	30	40	30	30	30	30
Allowable Moment Load	N•m	580					849				
Moment Stiffness	N•m/rad	$100×10^4$					$179×10^4$				
Output Resolution	Counts/ Revolution	6,553,600	10,485,760	13,107,200	15,728,640	20,971,520	6,553,600	10,485,760	13,107,200	15,728,640	20,971,520
Power Supply*2	V	200VAC					200VAC				
Mass (without brake)	kg	7.7					13				
Mass (with brake)	kg	8					13.8				
Protection Structure		Enclosed, self-cooled (IP54)									
Environmental Conditions		Operating temperature: 0 to 40°C • Storage temperature: -20 to +60°C. Operating and storage humidity: 20 to 80% RH (No condensation permitted). Vibration resistance : $25m/s^2$ (frequency: 10 to 400Hz) • Shock resistance: $300m/s^2$. Indoor installation: No dust, no metal powder, no corrosive gas, no inflammable gas, no oil mist, no other foreign matter and no direct sunshine. Altitude 1000m or less. Insulation resistance: 100MΩ or higher (DC 500V). Dielectric strength: AC 1500V/1min. Insulation class: Class E									
Recommended Drive		REL-230-18, REL-230-36, HA-800-6D/E-200					REL-230-36, REL-230-40, HA-800-24D/E-200				
Encoder Type		Magnetic absolute encoder					Magnetic absolute encoder				

The table shows typical output values of actuators.
*1 Typical specifications when combined with our drives.
*2 Low voltage option available for sizes 20, 25 and 32.

Units: mm

Size Symbol	SHA20A	SHA25A	SHA32A	SHA40A
øA	117	144	175	225
øB	69	84	110	132
øC	17	27	35	45
D	26	28.5	34	40
E	125.5	127.5	144	170

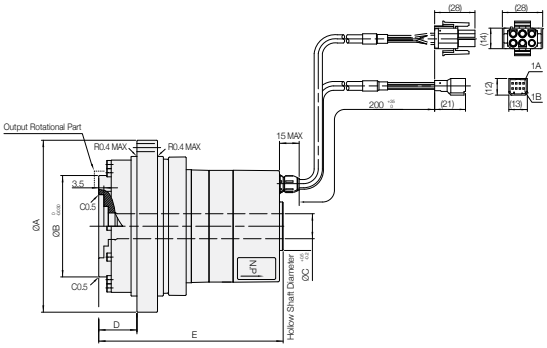

The mechanical accuracies of the output shaft and mounting flange are as follows:

Units: microns

Size Symbol	SHA20A	SHA25A	SHA32A	SHA40A
1. Output shaft surface runout	10	10	10	10
2-1. Output shaft axial runout (Outside diameter)	10	10	10	10
2-2. Output shaft axial runout (Inside diameter)	15	15	15	15
3. Parallelism between the output shaft and actuator mounting surface	30	30	35	35
4. Parallelism between the output shaft and actuator mounting surface	40	40	45	45
5. Concentricity between the output shaft and actuator mounting diameter	50	50	55	60
6. Concentricity between the output shaft and actuator mounting diameter	60	60	65	70

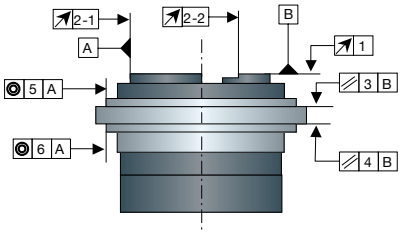

Note: All values are T.I.R. (Total Indicator Reading).

Hollow Shaft Brushless Actuators

SHA-SG Series

SHA Series AC Servo Actuators provide high torque and highly accurate rotary operation. These servo actuators utilize Harmonic Drive® precision gears combined with a brushless servomotor and magnetic absolute encoder. The SHA Series is an advanced version of the FHA series AC Servo Actuators, featuring a larger hollow shaft with a smaller, outer diameter.

The SHA Series is designed to operate with REL Series and HA-800 drives.

- High torque
- Compact, slim design
- Large center through hole
- Low voltage winding available for SHA25A
- Size 45 now available

SHA-SG Series Ratings

Item \ Model		SHA20A					SHA25A						SHA32A					
Ratio		51	81	101	121	161	11HP	51	81	101	121	161	11HP	51	81	101	121	161
Maximum Torque*1	N•m	73	96	107	113	120	26	127	178	204	217	229	62	281	395	433	459	484
Maximum Rotational Speed	rpm	117.6	74.1	59.4	49.6	37.3	509.1	109.8	69.1	55.4	46.3	34.8	436.4	94.1	59.3	47.5	39.7	29.8
Torque Constant	N•m/A_{rms}	16.5	27	33	40	53	4.2	19	31	39	46	62	4.5	21	33	42	50	66
Maximum Current*1	A_{rms}	6.0	4.9	4.5	4.0	3.4	8.9	8.6	7.5	7.0	6.3	5.2	19	17.3	15.2	13.5	12.2	9.9
Moment of Inertia $GD^2/4$ (without brake) J	kg•m^2	0.23	0.58	0.91	1.3	2.3	0.029	0.56	1.42	2.2	3.2	5.6	0.092	2.0	5.1	8.0	11	20
Moment of Inertia $GD^2/4$ (with brake) J	kg•m^2	0.26	0.65	1.0	1.4	2.6	0.034	0.66	1.66	2.6	3.7	6.6	0.107	2.3	5.9	9.2	13	23
One-Way Positioning Accuracy	arc•sec	60	50	50	50	50	120	50	40	40	40	40	120	50	40	40	40	40
Allowable Moment Load	N•m	187					410	258					932	580				
Moment Stiffness	N•m/rad	25.2×10^4					37.4×10^4	39.2×10^4					86.1×10^4	100×10^4				
Output Resolution	counts/ revolution	6,684,672	10,616,832	13,238,272	15,859,712	21,102,592	1,441,792	6,684,672	10,616,832	13,238,272	15,859,712	21,102,592	1,441,792	6,684,672	10,616,832	13,238,272	15,859,712	21,102,592
Power Supply	V	200VAC, 48VDC					200 VAC	100VAC, 200VAC, 48-90VDC					200 VAC	200VAC, 48-90VDC				
Mass (without brake)	kg	2.0					5	2.95					9.4	5.9				
Mass (with brake)	kg	2.1					5.1	3.1					9.7	6.2				
Protection Structure		Totally enclosed self-cooled type (equivalent to IP54)																
Environmental Conditions		Operating temperature: 0 to 40°C • Storage temperature: -20 to +60°C. Operating and storage humidity: 20 to 80% RH (No condensation permitted). Vibration resistance : 25m/s^2 (frequency: 10 to 400Hz) • Shock resistance: 300m/s^2. Indoor installation: No dust, no metal powder, no corrosive gas, no inflammable gas, no oil mist, no other foreign matter and no direct sunshine. Altitude 1000m or less. Insulation resistance: 100MΩ or higher (DC 500V). Dielectric strength: AC 1500V/1min. Insulation class: Class E																
Recommended Drive 100VAC			–				–	REL-230-18, REL-230-36					–	–				
Recommended Drive 200VAC			REL-230-18, HA-800-3D				REL-230-18	REL-230-18, HA-800-3D					REL-230-18, REL-230-36, HA-800-6D					

*1 When combined with HA-800 drive.
Note: The table shows typical output values of actuators. Encoder Type: Magnetic absolute encoder. Single-turn: 217 (313,072). Multi-turn: 216 (65,536) (Battery back-up). Please refer to the manual for rating details.

SHA-SG Series Ratings

Item \ Model		SHA40A					SHA45A					SHA58A				SHA65A			
Ratio		51	81	101	121	161	51	81	101	121	161	81	101	121	161	81	101	121	161
Maximum Torque*1	N•m	523	675	738	802	841	650	918	982	1070	1147	1924	2067	2236	2392	2400	2990	3263	3419
Maximum Rotational Speed	rpm	78.4	49.4	39.6	33.1	24.8	74.5	46.9	37.6	31.4	23.6	37.0	29.7	24.8	18.6	34.6	27.7	23.1	17.4
Torque Constant	$N•m/A_{rms}$	25	41	51	61	81	25	41	51	61	81	54	68	81	108	54	68	81	108
Maximum Current*1	A_{rms}	26.7	21.8	19.4	17.9	14.6	36.5	29.9	25.9	24.5	19.3	45	39	36	30	55	55	51	41
Moment of Inertia (without brake) $GD^2/4$ J	$kg•m^2$	5.0	13	20	28	50	6.8	17	27	38	68	96	149	214	379	110	171	245	433
Moment of Inertia (with brake) $GD^2/4$ J	$kg•m^2$	6.1	15	24	34	61	7.9	20	31	45	79	106	165	237	420	120	187	268	475
One-Way Positioning Accuracy	arc•sec	50	40	40	40	40	50	40	40	40	40	40	40	40	40	40	40	40	40
Allowable Moment Load	N•m	849					1127					2,180				2,740			
Moment Stiffness	N•m/rad	179×10^4					257×10^4					531×10^4				741×10^4			
Output Resolution	counts/rev	6,684,672	10,616,832	13,238,272	15,859,712	21,102,592	6684672	10616832	13238272	15859712	21102592	10,616,832	13,238,272	15,859,712	21,102,592	10,616,832	13,238,272	15,859,712	21,102,592
Power Supply	V	200VAC					200VAC					200VAC				200VAC			
Mass (without brake)	kg	9.9					12.4					29.5				37.5			
Mass (with brake)	kg	10.7					13.2					32				40			
Protection Structure		Totally enclosed self-cooled type (equivalent to IP54)																	
Environmental Conditions		Operating temperature: 0 to 40°C • Storage temperature: -20 to +60°C. Operating and storage humidity: 20 to 80% RH (No condensation permitted). Vibration resistance : $25m/s^2$ (frequency: 10 to 400Hz) • Shock resistance: $300m/s^2$. Indoor installation: No dust, no metal powder, no corrosive gas, no inflammable gas, no oil mist, no other foreign matter and no direct sunshine. Altitude 1000m or less. Insulation resistance: 100MΩ or higher (DC 500V). Dielectric strength: AC 1500V/1min. Insulation class: Class E																	
Recommended Drive AC-200V		REL-230-36, REL-230-40					REL-230-36		REL-230-40			–				–			
Recommended Drive		HA-800-24D					HA-800-24D/E-200					HA-800-24D				HA-800-24D			

*1 When combined with HA-800 drive.
Note: The table shows typical output values of actuators. Encoder Type: Magnetic absolute encoder. Single-turn: 217 (313,072). Multi-turn: 216 (65,536) (Battery back-up). Please refer to the manual for rating details.

Dimensions

Units: mm

Size Symbol	SHA20A	SHA25A	SHA32A	SHA40A	SHA45A	SHA58A	SHA65A
øA	94	114	146	175	195	247	284
øB	70	86	114	140	160	203	223
øC	17	27	35	45	45	65	65
D	11.5	15.5	20	26	28	37	42.5
E	103	109	125	148	153.5	213	222

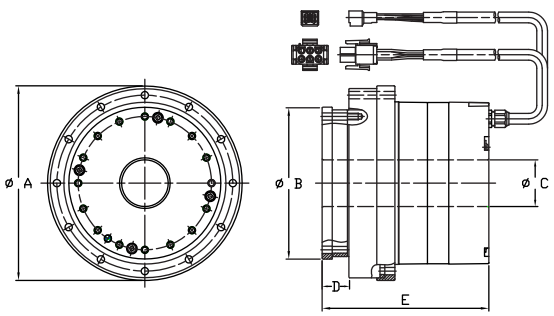

SHA20A, SHA25A, SHA32A, SHA40A, SHA45A

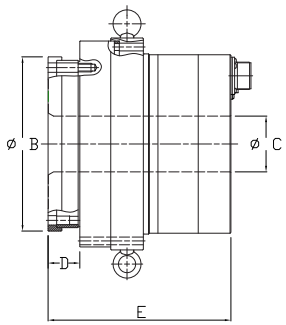

SHA58A, SHA65A

Brushless Actuators

FLA Series

The new ultra-flat, ultra-light brushless actuators combine our high-precision/high-performance reducers with a compact, high-output brushless DC motor. FLA actuators are available with our high-speed, high-efficiency Harmonic Planetary® gearhead or with our high-precision, high-torque Harmonic Drive® reducer.

- Ultra-Flat Shape
- Multiple Options Available: Three sizes, three ratios and two voltages
- Light Weight
- Designed to operate with a wide range of third-party servo drives

FLA Series Ratings

Item / Model		FLA-11A-08HP	FLA-14A-08HP	FLA-17A-09HP	FLA-20A-09HP
Ratio		8	8	9	9
Maximum Torque	N•m	1.8	3.7	7.3	12.1
Allowable Continuous Torque	N•m	0.6	1.2	3	4.1
Maximum Speed	rpm	500	500	500	400
Allowable Continuous Speed	rpm	100	100	100	100
Maximum Current (24VDC)	A_{rms}	8.7	18.0	26.2	31.4
Maximum Current (48VDC)	A_{rms}	4.5	9.6	13.6	17.8
Allowable Continuous Current (24VDC)	A_{rms}	3.0	6.0	10.4	10.7
Allowable Continuous Current (48VDC)	A_{rms}	1.6	3.0	5.3	6
Moment of Inertia ($GD^2/4$)	kgm^2	0.00013	0.00039	0.001	0.0026
Allowable Moment Load	N•m	1.2	1.6	2.0	2.4
Moment Stiffness	N•m/rad	2.0×10^3	3.3×10^3	4.4×10^3	5.1 x 103
Motor Position Sensor		Hall sensor			
Positioning Resolution per Motor Rotation	counts/rev	30	30	30	48
Output Shaft Resolution	counts/rev	240	240	270	432
Weight	g	390	620	870	1,060
Installation Direction		Fully enclosed self-cooling (IP40) Can be installed in any direction			
Enclosure		Fully enclosed self-cooling (IP40)			

Item / Model		FLA-11A-xxFB		FLA-14A-xxFB		FLA-17A-xxFB		FLA-20A-xxFB
Ratio		50	100	50	100	50	100	50
Maximum Torque	N•m	6.7	11	11.2	18.2	23	34	33
Allowable Continuous Torque	N•m	1.7	2.4	2.6	3.8	7.9	11.4	13
Maximum Speed	rpm	100	50	100	50	100	50	80
Allowable Continuous Speed	rpm	60	30	60	30	60	30	50
Maximum Current (24VDC)	A_{rms}	6.0	5.0	9.7	8.7	18.4	14.3	19.2
Maximum Current (48VDC)	A_{rms}	3.1	2.6	4.8	4.2	9.4	7.2	10.7
Allowable Continuous Current (24VDC)	A_{rms}	1.9	1.7	3.0	2.5	6.8	5.3	8.7
Allowable Continuous Current (48VDC)	A_{rms}	1.0	0.8	1.5	1.2	3.4	2.9	5.1
Moment of Inertia ($GD^2/4$)	kgm^2	0.0073	0.029	0.019	0.077	0.048	0.19	0.12
Allowable Moment Load	N•m	1.2		1.6		2.0		2.4
Moment Stiffness	N•m/rad	2.0×10^3		3.3×10^3		4.4×10^3		5.1 x 103
Motor Position Sensor		Hall sensor						
Positioning Resolution per Motor Rotation	counts/rev	30		30		30		48
Output Shaft Resolution	counts/rev	1,500	3,000	1,500	3,000	1,500	3,000	2,400
Weight	g	420		720		940		1,170
Installation Direction		Can be installed in any direction						
Enclosure		Fully enclosed self-cooling (IP40)						

MAGNETIC POLE SENSOR LEAD WIRE

COLOR	SIGNAL NAME	DESCRIPTION
WHITE	HU	Hall Sensor Output (U-Phase)
GREEN	HV	Hall Sensor Output (V-Phase)
BLUE	HW	Hall Sensor Output (W-Phase)
RED	+5V	Power Input +5 V
BLACK	0V	Power Input 0 V (GND)
YELLOW	TH	Thermistor Output

MOTOR LEAD WIRE

COLOR	SIGNAL
RED	Motor U-Phase
WHITE	Motor V-Phase
BLACK	Motor W-Phase

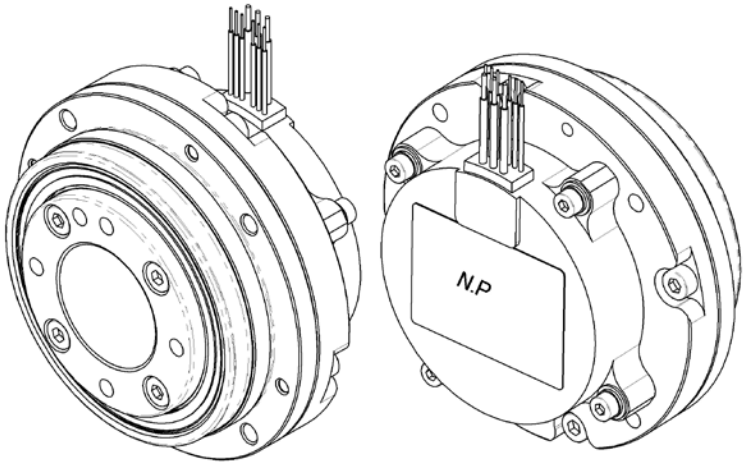

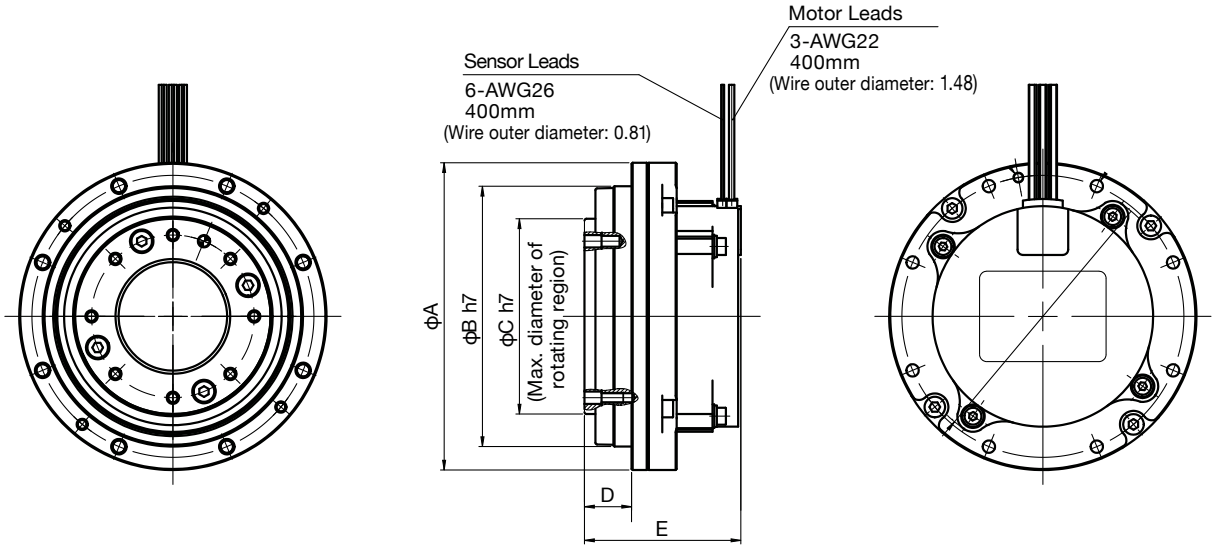

FLA-HP Dimensions

Unit: mm

Size Symbol	FLA-11	FLA-14	FLA-17	FLA-20
øA	71	85	92	100
øB	58	72	79	87
øC	43	54	60	64
D	13	13	14	14.5
E	39.8	43.3	48.7	47.8

FLA-FB Dimensions

Unit: mm

Size Symbol	FLA-11	FLA-14	FLA-17	FLA-20
øA	71	85	92	100
øB	58	72	79	87
øC	43	54	60	64
D	13.5	15	17.1	18.1
E	40.3	45.3	51.8	51.4

Low Profile Actuators

LPA IDT with Integrated Servo Drive

The LPA servo actuator offers a slim, low-profile alternative within our integrated drive lineup, and features high-precision Harmonic Drive® gearing combined with a brushless servo motor, magnetic dual absolute encoders and an Integrated Servo Drive with CANopen® or EtherCAT® communication options. This revolutionary product eliminates the need for an external drive and greatly simplifies cabling yet delivers high-positional accuracy and torsional stiffness in a compact housing.

- Low-profile, compact design
- EtherCAT and CANopen options - Approx. 100x faster than CANopen® (100Mps vs. 1Mps), Up to 200x more determinstic than CANopen® (1 µs vs. 100 - 200 µs), Up to 65,536 devices can be connected with line, star, tree or ring topology options.
- Zero Backlash
- Dual Absolute Encoders
- Output Sensing Encoder 14bit (16,384 cpr) resolution
- Input Sensing Encoder 15bit (32,768 cpr) resolution

LPA IDT Ratings

Item / Gear Ratio			LPA 20 IDT Actuator		
			51	81	101
Maximum torque		Nm	34	49	57
Maximum speed		rpm	88.2	55.6	44.6
Maximum current		A_{rms}	13.4	13.4	11.5
Continuous torque[1]		Nm	6.5	16	16.9
Continuous speed[1]		rpm	58.8	37.0	29.7
Continuous current[1]		A_{rms}	4.5	4.5	4
Torque constant		Nm/A_{rms}	3.0	4.8	6.0
Input power supply currrent		Adc	2.7	3.0	2.4
Moment of inertia		kgm^2	0.02	0.06	0.09
Allowable moment load		Nm	93		
Moment stiffness		Nm/rad	21×10^4		
Output bearing basic dynamic rated load		kN	7.3		
Encoder type		–	Dual Absolute		
Motor encoder resolution		–	2^{15} (32768)		
Gear encoder resolution		–	2^{14} (16384)		
Mass		kg	1.4		
Operating voltage		V	48 (24-60)		
Communication protocol		–	CANopen® (DS301/DS402), EtherCAT®		
Environmental	Ambient operating temp	°C	0-40		
	Operating humidity	%RH	20-80 (no condensation)		
	Vibration resistance[2]	m/s^2	25		
	Shock resistance[2]	m/s^2	300		
	Max operating altitude	m	1000		
	No dust, no metal powder, no corrosive gas, no flammable gas, no oil mist, Indoor use only, no direct sunlight				
Motor insulation			Insulation resistance: 100MΩ (by DC500V insulation tester), Dielectric strength: AC1500v/1 min Insulation class: F		
Mounting direction			Can be installed in any direction		
Recommended heatsink size [mm][1]			300 X 300 X 15 mm		

1. Value after temperature rise and saturation when the recommended aluminum heatsink is installed.
2. Motor operation is not guaranteed in applications where vibrations and impacts are continuously applied for a long period of time.

LPA IDT with Integrated Servo Drive

LPA with Integrated Servo Drive Features

Cross Roller Bearing: High Moment Loading Capacity

Gearhead: Harmonic Drive® SHD-2SH

Connector(s): Panel Mount
Exit Options: PM1, PM4

Optional Connection: I/O & MTO

Integrated Servo Drive: CANopen® 48VDC (24-60VDC), EtherCAT®

Dual Absolute Encoders: Motor Input Encoder (15bit), Gear Output Encoder (14bit)

Motor: DC Brushless

Model	LPA Integrated Series
Size	20
Design Version	A
Gear Ratio	51, 81, 101
Encoder and Resolution	15b14b - Integrated Drive Motor Input Encoder (15bit), Gear Output Encoder (14bit)

Options	PM1 – Axial Exit PM4 – Radial Exit
Communication and I/O Connection Signal	Blank: CANopen® Option S: CANopen® with IO Option E: EtherCAT® Option ES: EtherCAT® with IO Option
Special Specifications	Blank: Standard Product SP: Special Specification Code

CANopen

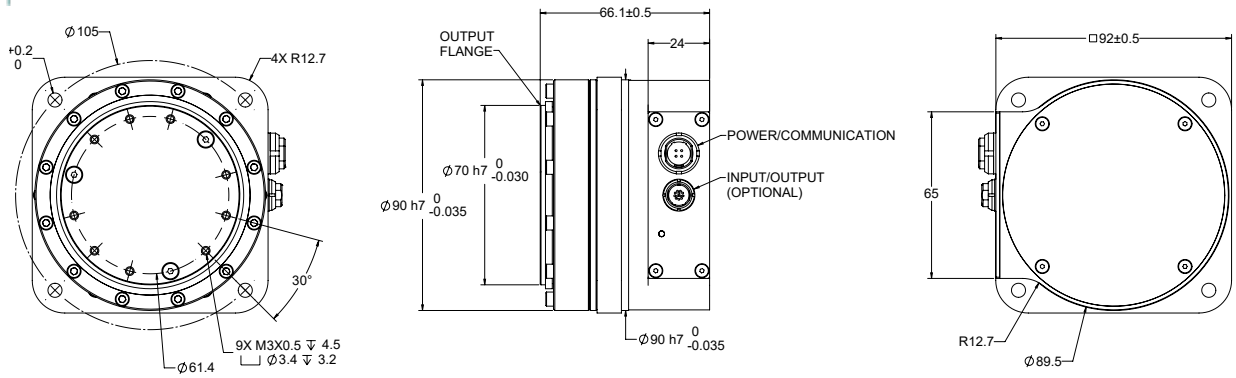

EtherCAT Conformance tested

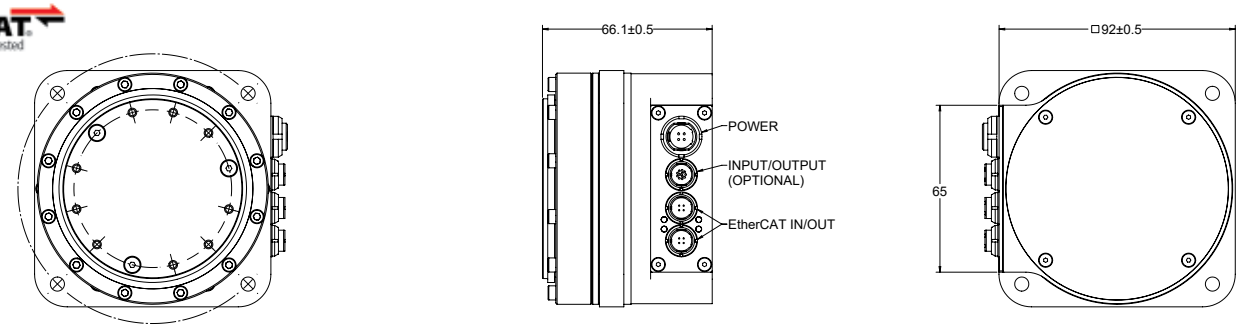

Brushless Actuators

RSF Supermini Series

RSF-3

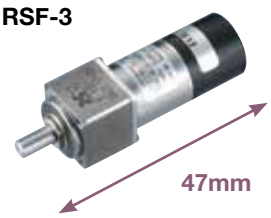

These extremely small servo actuators utilize zero backlash Harmonic Drive® precision gears, a brushless servo motor and an incremental encoder to deliver precision motion control. The RSF Supermini series is designed to operate with a wide range of third party drives as well as Harmonic Drive LLC's DCJ Series, DDP Series and HA680 drives. The units are small enough to fit inside the finger of a robotic hand.

- Compact, lightweight
- High output torque
- High positional accuracy
- RSF-5B is available with an optional brake

RSF Supermini Series Ratings

Item \ Model			RSF-3C			RSF-5B		
Ratio			30	50	100	30	50	100
Power Supply Voltage (drive)		V	24VDC±10%			24VDC±10%		
Maximum Continuous Current		A_{rms}	0.65	0.66	0.56	1.11	0.92	0.76
Rated Torque (during operation at allowable)		N•m	0.03	0.07	0.11	0.18	0.29	0.44
		in-lb	0.27	0.62	0.97	1.6	2.6	3.9
Maximum Rotational Speed (output shaft)		rpm	150	90	45	150	90	45
Continuous Stall Torque		N•m	0.04	0.08	0.12	0.28	0.44	0.65
		in-lb	0.35	0.71	1.06	2.5	3.9	5.8
Maximum Instantaneous Current		A_{rms}	1.5	1.4	1.1	2.3	2.2	1.7
Maximum Torque		N•m	0.13	0.21	0.3	0.5	0.9	1.4
		in-lb	1.15	1.86	2.66	4.4	8	12.4
Maximum Speed		rpm	333	200	100	333	200	100
Torque Constant		N•m/A_{rms}	0.11	0.18	0.4	0.3	0.54	1.1
		in-lb/A_{rms}	0.97	1.59	3.54	2.66	4.78	9.74
EMF Constant		V/(rpm)	0.015	0.025	0.05	0.04	0.07	0.13
Phase Resistance (at 20˚C)		Ω	1.34			0.82		
Phase Inductance		mH	0.18			0.27		
Moment of Inertia [4]	$GD^2/4$	kg•m^2	0.11×10^{-4}	0.29×10^{-4}	1.17×10^{-4}	0.66×10^{-4} (0.11×10^{-3})	1.83×10^{-4} (0.31×10^{-3})	7.31×10^{-4} (1.23×10^{-3})
	J	kgf•cm•s^2	1.07×10^{-4}	2.98×10^{-4}	11.90×10^{-4}	0.67×10^{-3} (1.13×10^{-3})	1.87×10^{-3} (3.15×10^{-3})	7.45×10^{-3} (12.6×10^{-3})
One-Way Positioning Accuracy		arc•sec	600	600	600	240	180	180
Allowable Radial Load (output shaft central value)		N	36			90		
Allowable Axial Load		N	130			270		
Encoder Pulses (motor shaft)		Pulse	200			500		
Encoder resolution of output shaft with quadrature [5]		counts/rev.	24,000	40,000	80,000	60,000	100,000	200,000
Motor Shaft Brake	Input Power Voltage	V	-			24VDC±10%		
	Retention Torque	N•m	-			0.18	0.29	0.44
Mass [6]	Without Brake	g	31.0(except clamp filter)			66.0(except clamp filter)		
	With Brake	g	-			86.0(except clamp filter)		
Recommended Drive		DC24V	DCJ-055-09/DDP-090-09					
			HA-680-4B-24			HA-680-4B-24		

1 The table shows typical output values of actuators.
2 The values in the table above are obtained when it is combined with the HA-680-4B-24 drive.
3 All values are typical.
4 The moment of inertia is the total value of the motor shaft and the gear's moment of inertia values converted to the output side. The values in parenthesis are for equipment with a brake.
5 The quad encoder resolution is (motor shaft encoder resolution when multiplied by 4) x (gear ratio).
6 The weight of clamp filter is 6g each.

Unit: mm

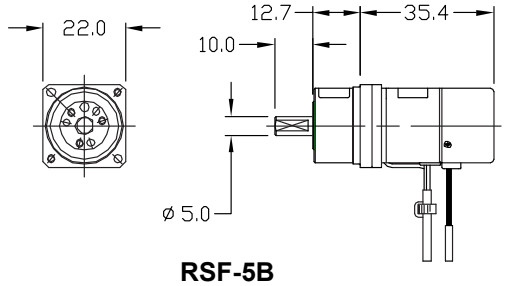

RSF-5B

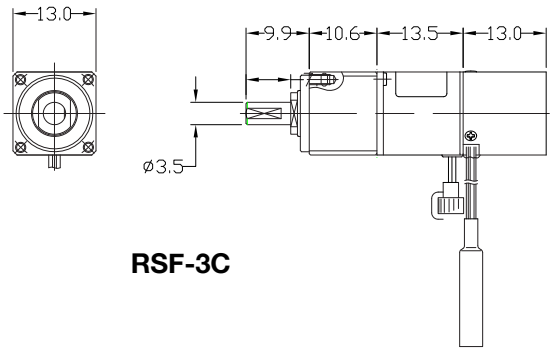

RSF-3C

RSF-Mini Series

These brushless servo actuators utilize zero backlash Harmonic Drive® precision gears for precise motion control. The RSF Mini Series is designed to operate with a wide range of third party drives as well as Harmonic Drive LLC's DCJ Series, DDP Series and HA680 drives.

- Exceptional positional accuracy
- Compact design
- High-rotational accuracy
- High resolution

RSF Mini Series Ratings

Item \ Model			RSF-8B			RSF-11B			RSF-14B		
Ratio			30	50	100	30	50	100	30	50	100
Power Suppy Voltage		V	24VDC								
Maximum Torque*3		N•m	1.8	3.3	4.8	4.5	8.3	11	9	18	28
		in-lb	15.9	29.2	42.5	39.8	73.5	97.4	79.7	159	248
Maximum Speed*3		rpm	200	120	60	200	120	60	200	120	60
Maximum Current*3		A_{rms}	3.8	3.9	2.9	14.4	15.8	9.4	14.4	17.2	12.3
Allowable Continuous Torque*3, 4		N•m	0.78	1.4	2.0	1.1	2.0	4.0	1.7	3.0	6.0
		in-lb	6.9	12.4	17.7	9.7	17.7	35.4	15.0	26.6	53.1
Allowable Continuous Current*3, 4		A_{rms}	2.0	2.0	1.5	5.0	4.9	4.9	4.9	4.7	4.7
Allowable Continuous Speed*3		rpm	100	60	30	100	60	30	100	60	30
Torque Constant		$N•m/A_{rms}$	0.62	1.1	2.1	0.4	0.66	1.5	0.76	1.3	2.6
EMF Constant		V(rpm)	0.07	0.11	0.22	0.04	0.07	0.15	0.08	0.13	0.28
Phase Resistance		Ω (25°C)	0.93			0.19			0.23		
Phase Inductance		mH	0.45			0.1			0.19		
Moment of Inertia	$GD^2/4$	$\times10^{-2}$ k•gm²	0.06	0.16	0.65	0.18	0.49	2.0	0.41	1.1	4.5
	J	$\times10^{-2}$ kgf•cm•s²	0.6	1.7	6.6	1.8	5.0	20	4.1	11	46
Allowable Radial Load		N	196			245			392		
Allowable Axial Load		N	98			196			392		
One-Way Positioning Accuracy		arc•sec	180	150	150	150	120	120	150	120	120
Encoder resolution of output shaft with quadrature*6		counts/rev	120000	200000	400000	120000	200000	400000	120000	200000	400000
Mass		kg	0.3			0.5			0.8		
Insulation Class			B								
Insulation Resistance			100M Ω (DC500V) or more								
Withstanding Voltage			AC500V/1 min								
Recommended Drive		DC24V	DCJ-055-09/DDP-090-09/ HA-680-4B-24			DDP-090-36/HA-680-6B-24					

1 The table shows output values of the actuator.
2 All specifications are applicable for actuators mounted on an aluminum heat sink of size: 150 x 150 x 6(mm).
3 Values for saturated actuator temperature. Other values are for actuator temperature of 20°C.
4 Values are during operation at allowable continuous rotation speed.
5 All values are typical.
6 Quad encoder resolution is (motor shaft encoder resolution) x 4 x (gear ratio).
7 The specifications above are based on using HA-680 drive.

Dimensions

Model	A	B	C	D	ø Eh7	ø F	G
RSF-8B	124.3	21.8	76.5	26	21	32.5	7.5
RSF-11B	141.7	25	90.7	26	24	32.5	9.5
RSF-14B	168.5	28	114.5	26	30	32.5	11.5

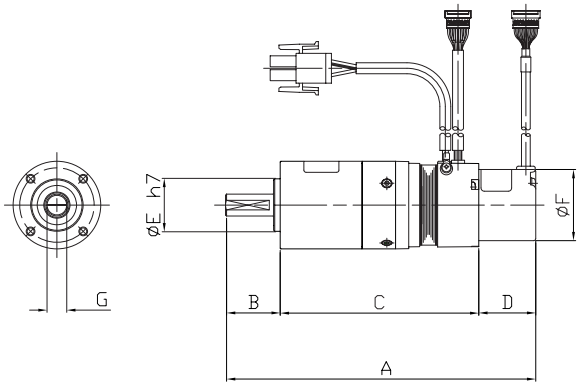

Brushless Actuators

RSF Series

The RSF series servo actuator combines a high performance brushless servomotor with a high accuracy Harmonic Drive® gearhead. When combined with a performance matched servo drive, the RSF actuator delivers precise, reliable motion control for machines requiring both high torque and long life. The RSF Series is designed to operate with a wide range of third party drives as well as Harmonic Drive LLC's RTL Series, and REL Series.

- Zero backlash
- Compact and lightweight
- High power
- High positioning and high rotational accuracy

RSF Series Ratings

Item \ Model		RSF-17		RSF-20A		RSF-25A		RSF-32A	
Ratio		50	100	50	100	50	100	50	100
Rated Output	W	62	62	120	111	180	190	310	310
Power Supply Voltage (drive)	V	200VAC							
Rated Torque	N•m	9.8	20	19	35	29	59	49	98
	in-lb	87	177	168	310	257	522	434	867
Rated Rotational Speed	rpm	60	30	60	30	60	30	60	30
Continuous Stall Torque	N•m	9.8	20	19	35	29	59	49	98
	in-lb	87	177	168	310	257	522	434	867
Max. Momentary Torque	N•m	34	54	56	82	98	157	220	330
	in-lb	301	478	496	726	867	1389	1947	2921
Max. Rotational Speed	rpm	90	45	90	45	90	45	90	45
Moment of Inertia*4	$(GD^2/4)$ $kg.m^2$	0.047	0.19	0.098	0.39	0.19	0.77	0.67	2.7
	(J) $kgfcm^2$	0.48	1.9	1.0	4.0	2.0	7.9	6.9	27
One-Way Positioning Accuracy	arc•sec	120		90		90		90	
Allowable Radial Load	N	780		1400		2900		4400	
	Lbf	175		315		652		989	
Allowable Axial Load	N	780		1370		2900		4400	
	Lbf	175		308		652		989	
Encoder resolution of output shaft with quadrature*5	counts/ revolution	400,000	800,000	400,000	800,000	400,000	800,000	400,000	800,000
Mass	kg	2.1		2.9		4.7		8.7	
Recommended Drive	AC200	RTL-230-18, REL-230-18							

Notes:
1 The values in the table are those at the output shaft.
2 The actuator specification is the value when mounted on the following heatsink plate:
RSF-17, RSF-20 250 x 250 x 12mm
RSF-25, RSF-32 300 x 300 x 15mm
3 The values are those on temperature rise saturation. The other values are those at 20°C.
4 The moment of inertia is the sum of the inertia of the motor and Harmonic Drive® gear reflected at the output shaft.
5 Quad Encoder resolution is calculated using (Motor shaft encoder resolution) x 4 x (Reduction ratio).

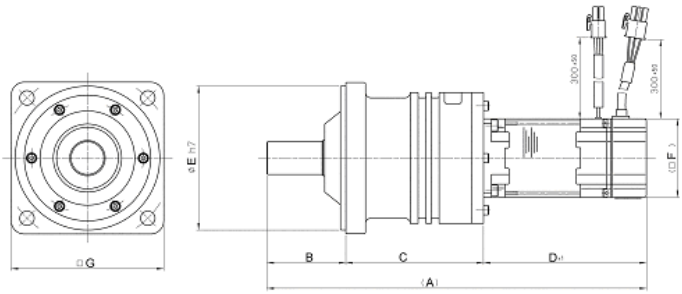

Dimensions

Unit: mm

Model	A	B	C	D±1	ø Eh7	F	G	Mass(kg)
RSF-17A	210	40	88	82	20	60	76	2.1
RSF-20A	242	48	98	96	85	60	93	2.9
RSF-25A	288.7	60	104.7	124	110	60	116	4.7
RSF-32A	331	80	123	128	130	80	137	8.7

RKF Series

The RKF series is a compact servo actuator. It combines a zero backlash Harmonic Drive® gear and an AC servo motor. The RKF Series is designed to operate with a wide range of third party drives as well as Harmonic Drive LLC's RTL Series, and REL Series.

- Compact and lightweight
- High power
- High positioning and high rotational accuracy

RKF Series Ratings

Item \ Model		RKF-20A		RKF-25A		RKF-32A	
Ratio		50	100	50	100	50	100
Rated Output	W	120	111	180	190	310	310
Power Supply Voltage (drive)	V	200VAC					
Rated Torque	N•m	19	35	29	59	49	98
	in-lb	168	310	257	522	434	867
Rated Rotational Speed	rpm	60	30	60	30	60	30
Continuous Stall Torque	N•m	19	35	29	59	49	98
	in-lb	168	310	257	522	434	867
Max. Momentary Torque	N•m	56	82	98	157	220	330
	in-lb	496	726	867	1389	1947	2921
Max. Rotational Speed	rpm	90	45	90	45	90	45
Moment of Inertia*4	(GD²/4) kg.m²	0.098	0.39	0.19	0.77	0.67	2.7
	(J) kgfcm²	1.0	4.0	2.0	7.9	6.9	27
One-Way Positioning Accuracy	arc•sec	90		90		90	
Allowable Radial Load	N	2000		2500		3900	
	Lbf	450		562		877	
Allowable Axial Load	N	880		1100		1600	
	Lbf	198		247		360	
Encoder resolution of output shaft with quadrature*5	counts/ revolution	400,000	800,000	400,000	800,000	400,000	800,000
Mass	kg	2.9		5.0		9.5	
Recommended Drive	AC200	RTL-230-18, REL-230-18					

Notes:
1 The aforementioned values are those at the output shaft including the Harmonic Drive® gear efficiency.
2 The actuator specifications are based on operating when mounted on an aluminum heat sink of the following sizes or its equivalent:
RKF-20 250 x 250 x 12mm
RKF-25, RKF-32 300 x 300 x 15mm
3 The values are those on temperature rise saturation. The other values are those at 20°C.
4 The moment of inertia is the total of the inertia moments of the motor shaft and Harmonic Drive® gear converted into the output shaft side.
5 Quad Encoder resolution is calculated using (Motor shaft encoder resolution) x 4 x (Reduction ratio).

Dimensions

Unit: mm

Model	A	B	C	D±1	ø Eh7	F	G	Mass(kg)
RKF-20A	180	20	64	96	100	60	108	2.9
RKF-25A	215.5	22	69.5	124	120	60	130	5.0
RKF-32A	241	25.5	87.5	128	155	80	165	9.5

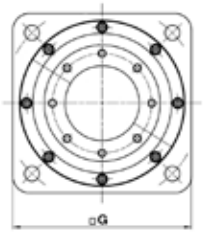

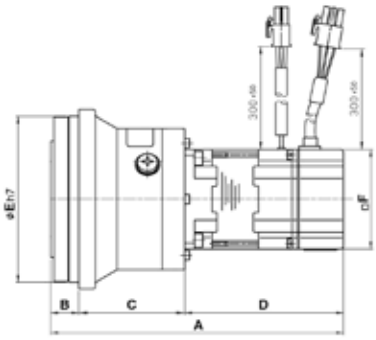

DC Servo Actuators

RH Mini Series

This RH Mini Series is a DC servo actuator incorporating a Harmonic Drive® precision gear, a high performance brush DC servomotor and an incremental encoder.

- Zero backlash
- High torque
- High-positional accuracy
- Compact design
- Lightweight
- High powered
- High-precision bearings
- High stiffness

RH Mini Series Ratings

Item \ Model		RH-5A			RH-8D		RH-11D		RH-14D	
		8802	5502	4402	6006	3006	6001	3001	6002	3002
Reduction Ratio		50	80	100	50	100	50	100	50	100
Rated Output	W	1.5	1.7	1.4	8.6	6.2	13.6	12.3	20.3	18.5
Rated Voltage	V	12	12	12	24	24	24	24	24	24
Maximum Momentary Torque	N•m	0.39	0.59	0.69	2.7	3.5	4.9	7.8	14	20
	in-lb	3.45	5.22	6.11	23.9	31.0	43.4	60.0	123.9	177.0
Maximum Continuous Stall Torque	N•m	0.24	0.39	0.43	1.5	2.3	2.5	4.4	5.4	7.8
	in-lb	2.12	3.45	3.81	13.3	20.4	22.1	38.9	47.8	69.0
Rated Torque	N•m	0.16	0.29	0.29	1.4	2	2.2	3.9	3.2	5.9
	in-lb	1.42	2.57	2.57	12.4	17.7	19.5	34.5	28.3	52.5
Maximum Positioning Speed	rpm	180	110	90	100	50	100	50	100	50
Rated Positioning Speed	rpm	88	55	44	60	30	60	30	60	30
Maximum Momentary Current	A_{rms}	0.83	0.78	0.77	1.6	1.1	2.4	2.1	5.4	4.1
Rated Current	A_{rms}	0.5	0.5	0.5	1.0	0.8	1.3	1.3	1.8	1.8
Torque Constant	N•m/A_{rms}	0.69	1.11	1.38	2.1	4.2	2.46	4.91	2.92	5.76
	in-lb/A_{rms}	6.1	9.8	12.2	18.6	37.2	21.7	43.5	25.8	51
Moment of Inertia	kg•m^2	6.3×10^{-4}	16×10^{-4}	25×10^{-4}	37×10^{-4}	150×10^{-4}	110×10^{-4}	430×10^{-4}	210×10^{-4}	810×10^{-4}
	kgf•cm•s^2	0.007	0.016	0.026	0.04	0.15	0.11	0.44	0.21	0.83
One-Way Positioning Accuracy	arc•sec	290	290	290	150	150	120	120	120	120
Allowable Axial Load	N	29	29	29	98	98	196	196	392	392
	lbf	7	7	7	22	22	44	44	88	88
Mass	kg	0.09	0.09	0.09	0.3	0.3	0.5	0.5	0.77	0.77
Environmental Conditions	Time constant: Continuous • Protection: Totally closed, self-cooling • Ambient temperature: 0 to 40°C Ambient humidity: 35 to 80% RH (no condensation permitted)									
Recommended Drive	20VDC	DCJ-055-09, DDP-090-09			–		–		–	
	24VDC	–			DCJ-055-09, DDP-090-09					

Dimensions

Unit: mm

Model	øA	øB	C	D
RH-5A	20	5	11	78
RH-8D	33	8	21.8	107.2
RH-11D	40	10	25	125.5
RH-14D	50	12	28	148

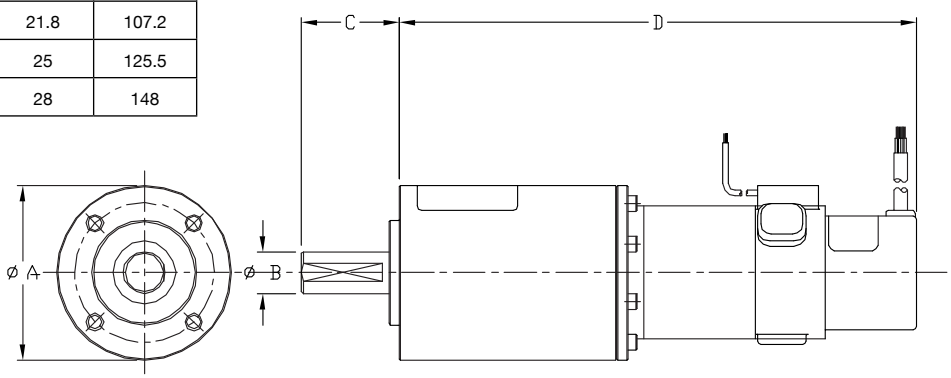

KDU Series

The KDU Series are Direct Drive Motors which achieve 10 arc•sec positioning accuracy as well as ±0.5 arc-sec repeatability with a resolution of 0.16 arc•sec.

Also, the KDU has a large Hollow Shaft design which allows cables, shafts or lasers to pass through the axis of rotation.

- Exceptional positional accuracy
- Exceptional repeatability
- Ultra high resolution

KDU Series Ratings

Item \ Model		KDU-13SB	KDU-13WB
Maximum Torque*2	N•m	7.0Nm (62.0 In.lb)	15.0Nm (132.8 In.lb)
Max. Rotational Speed	rpm	127	127
Torque Constant	N•m/A_{rms}	3.1 (26.9 In.lb/A_{rms})	6.5 (56.4 In.lb/A_{rms})
Input Power Supply Voltage	V	AC 100/AC200	
Moment of Inertia	kg.m^2	0.0047	0.0065
Moment Stiffness	N•m/rad	2.4 x 10^5	
Motor Position Sensor	counts/rev	Incremental encoder Square wave : phase A and B: 11,840,000 Z Index Pulse Signal	
Repeatability*3	arc•sec	± 0.5	
Absolute Positioning Accuracy*4	arc•sec	10 (Angular position corrected)	
Mass	kg	4.0	5.0
Mounting Direction	–	Output shaft to face upward	
Combined Drive	–	HA-770-2	
Induced Voltage Constant	V/ (rpm)	.033	0.68
Line Resistance	W (20°C)	9.1	14.0
Line Inductance	mH	19	35
Motor Insulation	–	Insulation Resistance: 100 M W more (DC500V) Insulation Strength: AC1500V/1min. Insulation Class: Class B	
Protective Structure*5	–	Total-enclosed self-enclosed type (IP 40 or equivalent)	

1 The table above shows output values of output shaft.
2 The values in the table above are obtained when connected to HA-770 servo drive.
3 The repeatability and absolute repeatability are the values measured in an environment of 23 ±0.3°C in temperature, 50% RH in humidity and with output shaft facing upward in mounting direction. Please contact Harmonic Drive LLC, to inquire about use with different environmental conditions.
4 Value after angular position of the HA-770 servo drive is corrected.
5 All parts, except the rotary sliding parts (oil seal), of the actuators are protected against solid bodies of superior dimensions to 1mm, and against the water sprays.

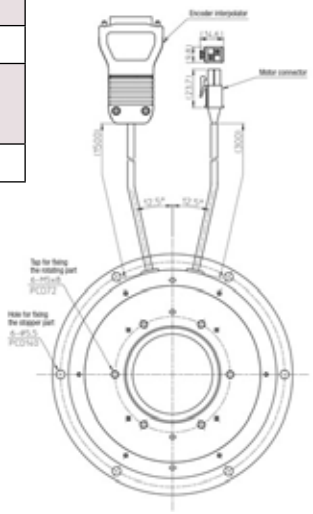

HA-770 Series

Direct Drive Motor HA-770 Series

Model	HA-770-2
Rated Current	1.8A
Maximum Current	10A
Power Source Voltage	AC100V~115V(Single-phase) + 10%~–15% 50/60Hz, AC200V~230V (Single-phase) + 10%~–15% 50/60Hz
Position Command Pulse	Line drive system: Maximum response frequency, Two-pulse system, One-pulse system: 1MHz, Two-phase pulse system: 200kHz
Control System	Sine wave PWM system, switching frequency: 25kHz
Control Mode	Position control
Weight	0.8kg

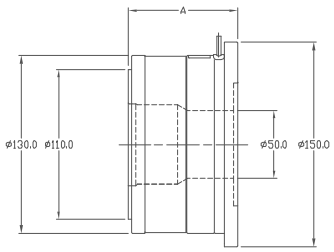

Motor Length

Unit: mm

	KDU-13SB	KDU-13WB
A	80	94

Hollow Shaft Motor

HMA Motor

Harmonic Drive LLC offers HMA hollow shaft motors. Hollow shaft design allows cables, shafts or lasers to pass through the axis of rotation.

- Large Hollow Shaft
- 17-bit Absolute Encoder
- Available in 5 frame sizes

HMA Motor Ratings

Item \ Model			HMAC08	HMAB09		HMAB12	HMAB15	HMAA21A
Combined drive			HA-800□-3D-200	HA-800□-3D-200	HA-800□-6D-E-100	HA-800□-6D-E-200	HA-800□-24D-E-200	HA-800□-24D-E-200
Input power supply voltage		V	200	200	100	200	200	200
Rated output		W	163	251		406	754	1320
Instantaneous maximum torque[*1]		N•m	1.8	3.0		6.6	13	33
Rated torque[*1, *2]		N•m	0.52	0.80		1.55	3.60	12.6
Maximum speed[*1]		rpm	6,000	5,600	4,800	4,800	4,000	3,000
Rated speed		rpm	3,000	3,000		2,500	2,000	1,000
Instantaneous maximum current[*1]		A	6.5	8.9	15.4	18	29	55
Rated current[*1, *2]		A_{rms}	2.1	2.5	4.3	4.2	7.8	20.0
Torque constant[1]		N•m/A_{rms}	0.35	0.41	0.24	0.44	0.54	0.72
EMF constant[*3]		V/(rpm)	0.037	0.043	0.025	0.046	0.057	0.075
Phase resistance (20°C)		Ω	1.43	1.2	0.4	0.33	0.19	0.028
Phase inductance		mH	2.5	3.0	1.0	1.4	1.2	0.29
Moment of Inertia ( ) indicates with brake	$GD^2/4$	$\times10^{-4}$kg·m^2	0.734 (0.828)	1.78 (2.16)		6.45 (6.83)	15.8 (19.8)	125 (141)
	J	$\times10^{-4}$kgf·cm·s^2	7.49 (8.45)	18.2 (22.1)		65.8 (69.7)	161 (202)	1280 (1444)
Allowable radial load (static)		N	800	800		1200	2400	4500
Allowable axial load (static)		N	1900	2400		3600	5000	14000
Rated radial load (At the rated speed)		N	175	185		233	530	1040
Rated axial load (At the rated speed)		N	100	105		130	180	880
Encoder type			Absolute encoder					
Encoder resolution capability	Single turn motor revolution		2^{17}(131,072)					
	Multi-turn revolution counter[*4]		2^{16}(65,536)					
Weight ( ) indicates with brake		kg	1.4 (1.5)	2.0 (2.1)		3.4 (3.8)	5.5 (6.2)	17.5 (19.7)

The values in the table above show typical values.
*1: When tested with HA-800.
*2: This is the value for saturated temperature when installed on the next aluminum heatsink of the following size:
HMAC08: 320 x 320 x 16 [mm], HMAB09: 350 x 350 x 18 [mm], HMAB12: 400 x 400 x 20 [mm], HMAB15: 500 x 500 x 25 [mm], HMAA21A: 650 x 650 x 30 [mm]
*3: This is the value of the phase EMF constant multiplied by 3.
*4: The range of the multi revolution counter is from -32,768 to 32,767.

Dimensions

Unit: mm

Model	øA	øB h7	øC	D
HMAC08	94	75	16	89
HMAB09	114	90	22	88.5
HMAB12	146	114	30	95.5
HMAB15	175	140	40	110
HMAA21A	247	200	60	157

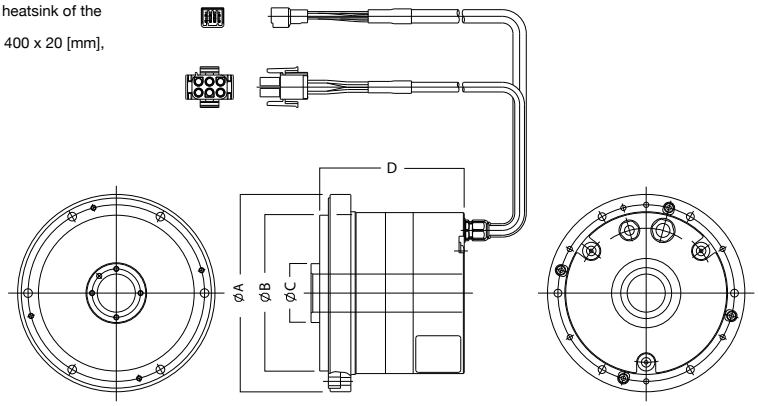

LBC Series

The precision lead screw provides positioning accuracy in the micron range with sub-micron repeatability. The actuator is capable of thrust forces up to 12,000 N.

This product is useful for precise positioning of heavy loads or applications where high force is required such as molding equipment or precision presses.

- 12,000 N Force
- 0.32 µm positioning resolution
- Brushless servomotor with incremental encoder
- Integral Limit Switches

LBC Series Ratings

Item / Model	Drive	Stroke (mm)	Maximum Driving Force (N)	Resolution (µm)	Maximum Speed (mm/s)	Repeatability	Outside Dimensions (mm)	Total length (mm)
LBC-25A-5D6K	Brushless Motor	50	6000	0.32	20	±5µm or less/50mm stroke	ϕ136	353
LBC-25A-5D12K	Brushless Motor	50	12000	0.16	10			

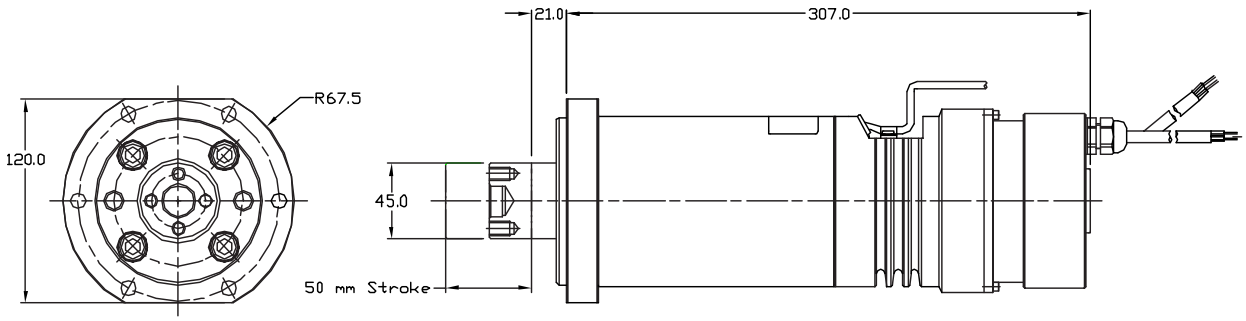

Precision Linear Actuators

LA Series

A precision ball screw provides positioning accuracy better than 2 microns and repeatability of 0.1 microns.

This product is well suited for measuring instruments, test and inspection systems, optical equipment, semiconductor and LCD manufacturing equipment.

- 49 N Force
- 2 micron positioning accuracy
- Brush DC motor with incremental encoder

LA Series Ratings

Item / Model	Drive	Stroke (mm)	Maximum Driving Force (N)	Resolution (µm)	Maximum Speed (mm/s)	One-way Positioning Accuracy	Repeatability	Outside Dimensions (mm)	Total length (mm)
LA-30B-10-F	DC motor	10	49	0.0174	0.9	2µm or less/40µm stroke	±0.1µm or less/1mm stroke	28	143
LA-32-30-F	DC motor	30	49	0.0174	0.9			36	164

Dimensions

Unit: mm

Size	LA-30B-10F	LA-32-30-F
A	28	36
B(Stroke)	10	30
C	10	13.3
D	133	150.8

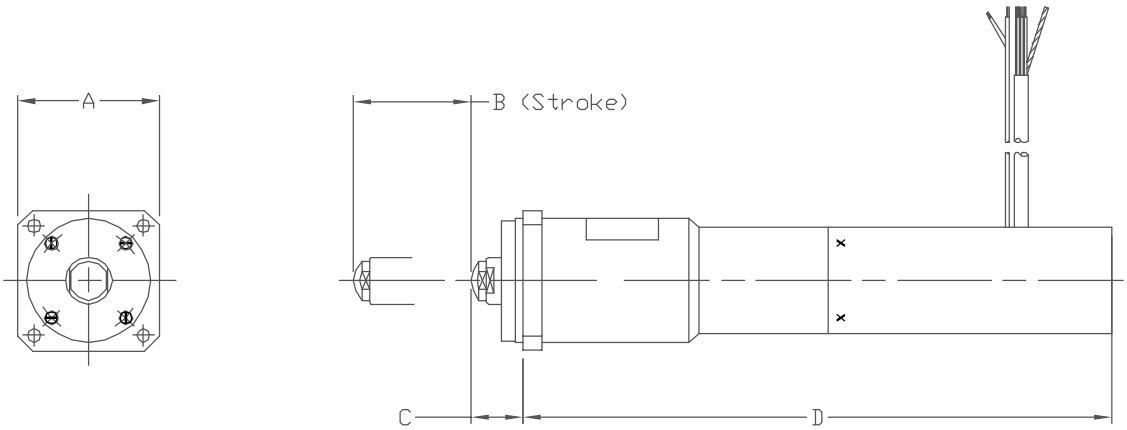

LAH Series

A precision ball screw provides positioning accuracy better than 4 microns and repeatability of 1 micron.

This product is well suited for measuring instruments, test and inspection systems, optical equipment, semiconductor and LCD manufacturing equipment.

- 392 to 3000 N Force
- 4 micron positioning accuracy

LAH Series Ratings

Item / Model	Drive	Stroke (mm)	Maximum Driving Force (N)	Resolution (µm)	Maximum Speed (mm/s)	One-way Positioning Accuracy	Repeatability	Outside Dimensions (mm)	Total length (mm)
LAH-46-1002-F	DC motor	10	392	0.069	3.7	4µm or less/.02mm stroke	±0.5µm or less/1mm stroke	47	185
LAH-46-3002-F	DC motor	30	392	0.069	3.7			47	204
LAH-80-5020	Stepper motor	50	3000	2	10	4µm or less/2mm stroke	±1µm or less/1mm stroke	85	320

Dimensions

Unit: mm

Model / Symbol	LAH-46-1002-F	LAH-46-3002-F
A	47	47
B(Stroke)	10	30
C	16	16
D	169	188

LAH-46

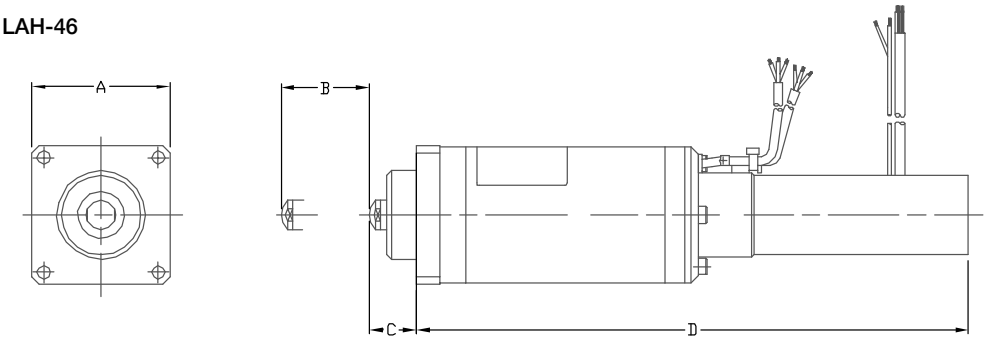

LAH-80

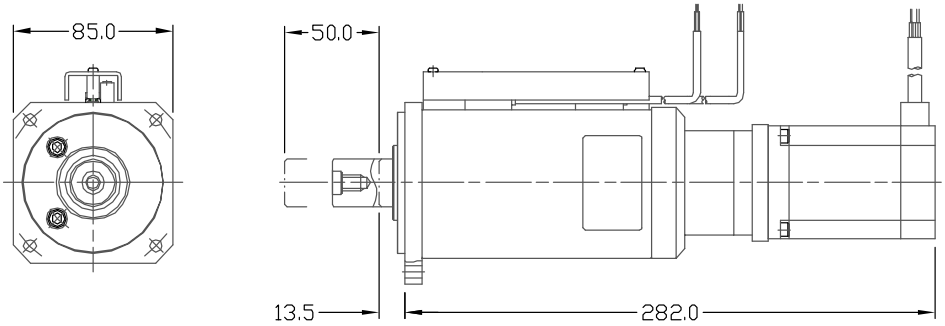

Servo Drives

DCJ Series

DDP Series

RTL & REL Series

Servo Drive Specifications

DC Digital Servo Drive DCJ Series

MODEL	Vdc	Ic (Apk)	Ip (Apk)	Control Modes	Control Interface	Encoder
DCJ-055-09	20-55	3	9	· Indexer, Point-to-Point · Camming, Gearing · Position, Velocity, Torque (PVT)	CANopen/DeviceNet ASCII and discrete I/O, Stepper commands ± 10V position/velocity/torque command PWM velocity/torque command Master encoder (Gearing/Camming)	14 Wire Standard Incremental Encoder Type
DCJ-055-18	20-55	6	18			
DCJ-090-03	20-90	1	3			
DCJ-090-09	20-90	3	9			
DCJ-090-12	20-91	6	12			

DC Digital Servo Drive DDP Series

MODEL	Vdc	Ic (Apk)	Ip (Apk)	Control Modes	Control Interface	Encoder
DDP-090-09	90	3	9	· Indexer, Point-to-Point · Camming, Gearing · Position, Velocity, Torque (PVT)	CANopen/DeviceNet ASCII and discrete I/O, Stepper commands ± 10V position/velocity/torque command PWM velocity/torque command Master encoder (Gearing/Camming)	14 Wire Standard Incremental Encoder Type
DDP-090-18	90	6	18			
DDP-090-36	90	12	36			
DDP-055-18	55	6	18			
DDP-180-09	180	3	9			
DDP-180-18	180	6	18			

AC Digital Servo Drive RTL Series

MODEL	Vac	Ic (Apk)	Ip (Apk)	Control Modes	Control Interface	Encoder
RTL-230-18	100-240	6	18	· Indexer, Point-to-Point · Camming, Gearing · Position, Velocity, Torque (PVT)	CANopen/DeviceNet ASCII and discrete I/O, Stepper commands ± 10V position/velocity/torque command PWM velocity/torque command Master encoder (Gearing/Camming)	14 Wire Standard Incremental Encoder Type
RTL-230-36	100-240	12	36			
RTL-230-40	100-240	20	40			

AC Digital Servo Drive REL Series

MODEL	Vac	Ic (Apk)	Ip (Apk)	Control Modes	Control Interface	Encoder
REL-230-18	100-240	6	18	· Indexer, Point-to-Point · Camming, Gearing · Position, Velocity, Torque (PVT)	CANopen over EtherCAT (CoE) ASCII and discrete I/O, Stepper commands ± 10V position/velocity/torque command PWM velocity/torque command Master encoder (Gearing/Camming)	14 Wire Standard Incremental Encoder Type 4 Wire Serial Communication Incremental Encoder HD Absolute Encoder S Type HD Absolute Encoder A Type Biss-C (multi-turn, Bi-direction) EnDat 2.1/2.2
REL-230-36	100-240	12	36			
REL-230-18	100-240	6	18			
REL-230-36	100-240	12	36			
REL-230-18	100-240	6	18			
REL-230-36	100-240	12	36			
REL-230-18	100-240	6	18			
REL-230-36	100-240	12	36			
REL-230-40	100-240	20	40			

Servo Drives

Servo Drive and Actuator Combinations

DC Digital Servo Drive DCJ Series

MODEL	Vdc	Ic (Apk)	Ip (Apk)	Supply Voltage	Combination Actuator
DCJ-055-09	20-55	3	9	DC24V	FHA-8C-30 / 50 / 100-US200-E, RSF-8B-30 / 50 / 100-F100-24B, RSF-5A-30 / 50 / 100-US050, RSF-3B-30 / 50 / 100-US020
DCJ-055-18	20-55	6	18		FHA-11C-30 / 50 / 100-US200-E
DCJ-090-03	20-90	1	3		–
DCJ-090-09	20-90	3	9		–
DCJ-090-12	20-90	6	12		–

DC Digital Servo Drive DDP Series

MODEL	Vdc	Ic (Apk)	Ip (Apk)	Supply Voltage	Combination Actuator
DDP-090-09	90	3	9	DC24V	FHA-8C-30 / 50 / 100-US200-E, RSF-8B-30 / 50 / 100-F100-24B, RSF-5A-30 / 50 / 100-US050, RSF-3B-30 / 50 / 100-US020
DDP-090-18	90	6	18		FHA-11C-30 / 50 / 100-US200-E
DDP-090-36	90	12	36		FHA-14C-30 / 50 / 100-US200-E, FHA-17C50* / 100 / 160-US250-E-SP, RSF-14B-30 / 50 / 100-F100-24B, RSF-11B-30 / 50 / 100-F100-24B
DDP-055-18	55	6	18		–
DDP-180-09	180	3	9		–
DDP-180-18	180	6	18		–

AC Digital Servo Drive RTL Series

MODEL	Vac	Ic (Apk)	Ip (Apk)	Supply Voltage	Combination Actuator
RTL-230-18	100-240	6	18	AC100/200V	FHA-8C-30 / 50 / 100-US200 / 12S176b / E200, FHA-11C-30 / 50 / 100-US200 / 12S176b / E200, FHA-14C-30 / 50 / 100-US200 / 12S176 / E200
				AC100V	FHA-17C-50 / 100 / 160-US250 / E250 / S248, FHA-25C-100 / 160-US250 / E250 / S248, FHA-32C-160-US250 / E250 / S248
				AC200V	FHA-17C-50 / 100 / 160-US250 / E250 / S248, FHA-25C-100 / 160-US250 / E250 / S248, FHA-32C-160-US250 / E250 / S248, FHA-40C-100 / 160-US250 / E250 / S248
RTL-230-36	100-240	12	36	AC100V	FHA-25C-50-US250 / E250 / S248, FHA-32C-50 / 100-US250 / E250 / S248
				AC200V	FHA-40C-50-US250 / E250 / S248
RTL-230-40	100-240	20	40	AC200V	–

AC Digital Servo Drive REL Series

MODEL	Vac	Ic (Apk)	Ip (Apk)	Supply Voltage	Combination Actuator
REL-230-18	100-240	6	18	AC100/200V	FHA-8C-30 / 50 / 100-US200 / 12S17b / E200, FHA-11C-30 / 50 / 100-US200 / 12S17b / E200, FHA-14C-30 / 50 / 100-US200 / 12S17b / E200
				AC100V	FHA-17C-50 / 100 / 160-US250 / E250 / S248, FHA-25C-100 / 160-US250 / E250 / S248, FHA-32C-160-US250 / E250 / S248
				AC200V	FHA-17C-50 / 100 / 160-US250 / E250 / S248, FHA-25C-50 / 100 / 160-US250 / E250 / S248, FHA-32C-50 / 100 / 160-US250 / E250 / S248, FHA-40C-100 / 160-US250 / E250 / S248
REL-230-36	100-240	12	36	AC100V	FHA-25C-50-US250 / E250 / S248, FHA-32C-50 / 100-US250 / E250 / S248
				AC200V	FHA-40C-50-US250 / E250 / S248
REL-230-18	100-240	6	18	AC200V	SHA-20SG-51 / 81 / 101 / 121 / 161, SHA-20CG-50 / 80 / 100 / 120 / 160, SHA-25SG-51 / 81 / 101 / 121 / 161, SHA-25CG-50 / 80 / 100 / 120 / 160, SHA-32SG-161, SHA-32CG-160
REL-230-36	100-240	12	36		SHA-32SG-51 / 81 / 101 / 121, SHA-32CG-50 / 80 / 100 / 120, SHA-40SG-121 / 161, SHA-40CG-120 / 160
REL-230-40	100-240	20	40		SHA-40SG-51 /81 /101, SHA-40CG-50 /80 /100

Cup Type

CSF-2A Series

The Harmonic Drive® CSF gears can be directly integrated into your machinery/equipment. Available in a variety of sizes and ratios, you can select the model that is most suitable for your needs.

- Zero backlash
- Compact design
- High torque capacity
- High torsional stiffness
- High positioning accuracy
- Lightweight, big bore options available (p. 38)
- Housed gear unit is available (see p. 44)

L_{10} Life: 7,000h

CSF-2A Series Ratings

Size \ Item	Ratio	Rated Torque at 2000rpm		Limit for Repeated Peak Torque		Limit for Momentary Peak Torque	
		Nm	In-lb	Nm	In-lb	Nm	In-lb
8	30	0.9	8	1.8	16	3.3	29
	50	1.8	16	3.3	29	6.6	58
	100	2.4	21	4.8	42	9.0	80
11	30	2.2	19	4.5	40	8.5	75
	50	3.5	31	8.3	73	17	150
	100	5.0	44	11	97	25	221
14	30	4.0	35	9.0	80	17	150
	50	5.4	48	18	159	35	310
	80	7.8	69	23	204	47	416
	100	7.8	69	28	248	54	478
17	30	8.8	78	16	142	30	266
	50	16	142	34	301	70	620
	80	22	195	43	381	87	770
	100	24	212	54	478	108	956
	120	24	212	54	478	86	761
20	30	15	133	27	239	50	443
	50	25	221	56	496	98	867
	80	34	301	74	655	127	1124
	100	40	354	82	726	147	1301
	120	40	354	87	770	147	1301
	160	40	354	92	814	147	1301
25	30	27	239	50	443	95	841
	50	39	345	98	867	186	1646
	80	63	558	137	1212	255	2257
	100	67	593	157	1389	284	2513
	120	67	593	167	1478	304	2690
	160	67	593	176	1558	314	2779
32	30	54	478	100	885	200	1770
	50	76	673	216	1912	382	3381
	80	118	1044	304	2690	568	5027
	100	137	1212	333	2947	647	5726
	120	137	1212	353	3124	686	6071
	160	137	1212	372	3292	686	6071
40	50	137	1212	402	3558	686	6071
	80	206	1823	519	4593	980	8673
	100	265	2345	568	5027	1080	9558
	120	294	2602	617	5460	1180	10443
	160	294	2602	647	5726	1180	10443

Size \ Item	Ratio	Rated Torque at 2000rpm		Limit for Repeated Peak Torque		Limit for Momentary Peak Torque	
		Nm	In-lb	Nm	In-lb	Nm	In-lb
45	50	176	1558	500	4425	950	8408
	80	313	2770	706	6248	1270	11240
	100	353	3124	755	6682	1570	13895
	120	402	3558	823	7284	1760	15576
	160	402	3558	882	7806	1910	16904
50	50	245	2168	715	6328	1430	12656
	80	372	3292	941	8328	1860	16461
	100	470	4160	980	8673	2060	18231
	120	529	4682	1080	9558	2060	18231
	160	529	4682	1180	10443	2450	21683
58	50	353	3124	1020	9027	1960	17346
	80	549	4859	1480	13098	2450	21683
	100	696	6160	1590	14072	3180	28143
	120	745	6593	1720	15222	3330	29471
	160	745	6593	1840	16284	3430	30356
65	50	490	4337	1420	12567	2830	25046
	80	745	6593	2110	18674	3720	32922
	100	951	8416	2300	20355	4750	42038
	120	951	8416	2510	22214	4750	42038
	160	951	8416	2630	23276	4750	42038
80	50	872	7717	2440	21594	4870	43100
	80	1320	11682	3430	30356	6590	58322
	100	1700	15045	4220	37347	7910	70004
	120	1990	17612	4590	40622	7910	70004
	160	1990	17612	4910	43454	7910	70004
90	50	1180	10443	3530	31241	6660	58941
	80	1550	13718	3990	35312	7250	64163
	100	2270	20090	5680	50268	9020	79827
	120	2570	22745	6160	54516	9800	86730
	160	2700	23895	6840	60534	11300	100005
100	50	1580	13983	4450	39383	8900	78765
	80	2380	21063	6060	53631	11600	102660
	100	2940	26019	7350	65048	14100	124785
	120	3180	28143	7960	70446	15300	135405
	160	3550	31418	9180	81243	15500	137175

Dimensions

Unit: mm

Symbol \ Size	8	11	14	17	20	25	32	40
øA	30	40	50	60	70	85	110	135
B	22.1	25.8	28.5	32.5	33.5	37	44	53

Symbol \ Size	45	50	58	65	80	90	100
øA	155	170	195	215	265	300	330
B	58.5	64	75.5	83	101	112.5	125

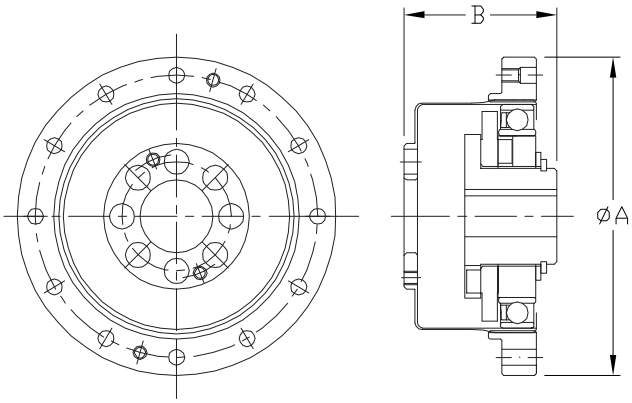

Cup Type - High Torque

CSG-2A Series

CSG is available in 10 sizes with gear reduction ratios from 50:1 to 160:1. CSG high torque series was based on our CSF standard torque series with the goal of upgrading load capacity, strength & reliability and extending service life.

- Zero backlash
- Compact and simple design
- High torque capacity
- High torsional stiffness
- High positioning accuracy
- Lightweight, big bore options available (p. 39)
- Housed gear unit is available (see p. 46)
- 30% higher torque than CSF

L_{10} Life: 10,000h

Performance comparison of CSF and CSG Series Harmonic Drive® gearing

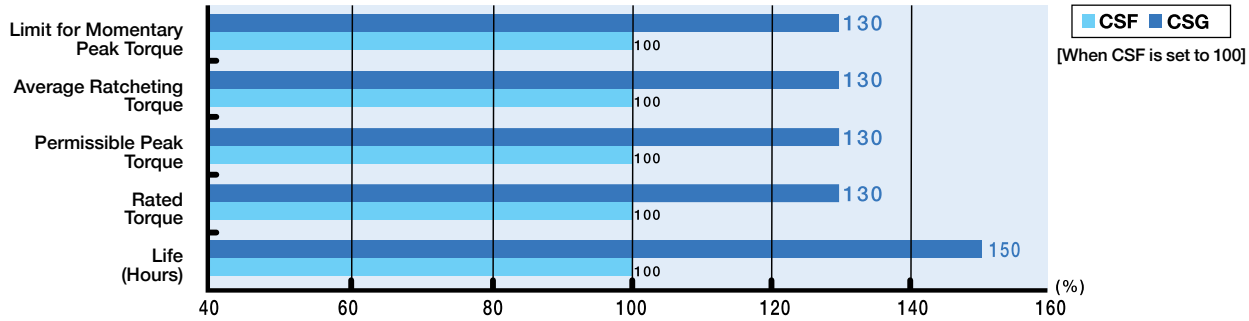

CSG-2A Series Ratings

Size \ Item	Ratio	Rated Torque at 2000rpm		Limit for Repeated Peak Torque		Limit for Momentary Peak Torque	
		Nm	In-lb	Nm	In-lb	Nm	In-lb
14	50	7.0	62	23	204	46	407
	80	10	89	30	266	61	540
	100	10	89	36	319	70	620
17	50	21	186	44	389	91	805
	80	29	257	56	496	113	1000
	100	31	274	70	620	143	1266
	120	31	274	70	620	112	991
20	50	33	292	73	646	127	1124
	80	44	389	96	850	165	1460
	100	52	460	107	947	191	1690
	120	52	460	113	1000	191	1690
	160	52	460	120	1062	191	1690
25	50	51	451	127	1124	242	2142
	80	82	726	178	1575	332	2938
	100	87	770	204	1805	369	3266
	120	87	770	217	1920	395	3496
	160	87	770	229	2027	408	3611
32	50	99	876	281	2487	497	4398
	80	153	1354	395	3496	738	6531
	100	178	1575	433	3832	841	7443
	120	178	1575	459	4062	892	7894
	160	178	1575	484	4283	892	7894

Size \ Item	Ratio	Rated Torque at 2000rpm		Limit for Repeated Peak Torque		Limit for Momentary Peak Torque	
		Nm	In-lb	Nm	In-lb	Nm	In-lb
40	50	178	1575	523	4629	892	7894
	80	268	2372	675	5974	1270	11240
	100	345	3053	738	6531	1400	12390
	120	382	3381	802	7098	1530	13541
	160	382	3381	841	7443	1530	13541
45	50	229	2027	650	5753	1235	10930
	80	407	3602	918	8124	1651	14611
	100	459	4062	982	8691	2041	18063
	120	523	4629	1070	9470	2288	20249
	160	523	4629	1147	10151	2483	21975
50	80	484	4283	1223	10824	2418	21399
	100	611	5407	1274	11275	2678	23700
	120	688	6089	1404	12425	2678	23700
	160	688	6089	1534	13576	3185	28187
58	80	714	6319	1924	17027	3185	28187
	100	905	8009	2067	18293	4134	36586
	120	969	8576	2236	19789	4329	38312
	160	969	8576	2392	21169	4459	39462
65	80	969	8576	2743	24276	4836	42799
	100	1236	10939	2990	26462	6175	54649
	120	1236	10939	3263	28878	6175	54649
	160	1236	10939	3419	30258	6175	54649

Dimensions

Unit: mm

Symbol \ Size	14	17	20	25	32	40	45	50	58	65
ø A	50	60	70	85	110	135	155	170	195	215
B	28.5	32.5	33.5	37	44	53	58.5	64	75.5	83

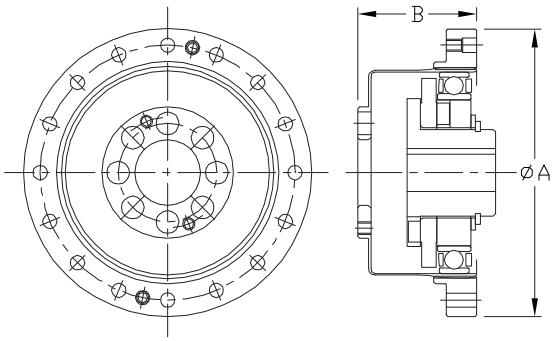

Cup Type

CSF-2A-LW Series

The Harmonic Drive® CSF Lightweight component set is compact and can be directly integrated into your machinery/equipment. Available in 5 sizes and multiple ratios, you can select the unit that is most suitable for your project.

- Lightweight, 30+% lighter than standard CSF component set
- Zero backlash
- Compact and simple configuration
- High-torque capacity
- High rigidity
- High accuracy
- High efficiency
- Optional big bore

L_{10} Life: 7,000h

CSF-2A-LW Series Ratings

Item / Size	Ratio	Rated Torque at 2000rpm		Limit for Repeated Peak Torque		Limit for Momentary Peak Torque	
		Nm	In-lb	Nm	In-lb	Nm	In-lb
14	30	4.0	35	9.0	80	17	150
	50	5.4	48	18	159	35	310
	80	7.8	69	23	204	47	416
	100	7.8	69	28	248	54	478
17	30	8.8	78	16	142	30	266
	50	16	142	34	301	70	620
	80	22	195	43	381	87	770
	100	24	212	54	478	108	956
	120	24	212	54	478	86	761
20	30	15	133	27	239	50	443
	50	25	221	56	496	98	867
	80	34	301	74	655	127	1124
	100	40	354	82	726	147	1301
	120	40	354	87	770	147	1301
	160	40	354	92	814	147	1301
25	30	27	239	50	443	95	841
	50	39	345	98	867	186	1646
	80	63	558	137	1212	255	2257
	100	67	593	157	1389	284	2513
	120	67	593	167	1478	304	2690
	160	67	593	176	1558	314	2779
32	30	54	478	100	885	200	1770
	50	76	673	216	1912	382	3381
	80	118	1044	304	2690	568	5027
	100	137	1212	333	2947	647	5726
	120	137	1212	353	3124	686	6071
	160	137	1212	372	3292	686	6071

Dimensions

Unit: mm

Symbol \ Size	14	17	20	25	32
øA	50	60	70	85	110
B	28.5	32.5	33.5	37	44

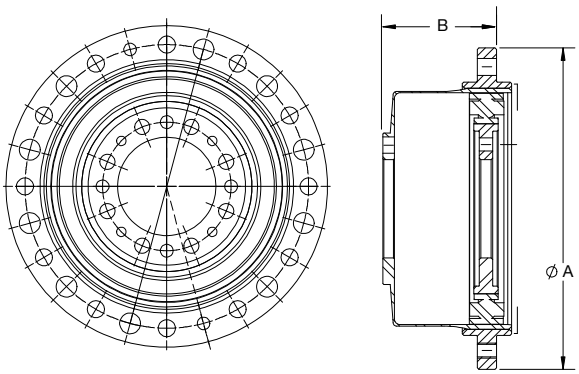

Cup Type - High Torque

CSG-2A-LW Series

The Harmonic Drive® CSG Lightweight component set is compact and can be directly integrated into your machinery/equipment. The CSG-2A-LW product is available in two versions: CSG-2A-LW for maximum torque and CSG-2A-LW-BB (big bore) for maximum through hole size. Available in 5 sizes and multiple ratios, you can select the unit that is most suitable for your project.

- Lightweight, 30+% lighter than standard CSG component
- Optional big bore
- Zero backlash
- Compact and simple design
- High torque capacity
- High torsional stiffness
- High positioning accuracy

L_{10} Life: 10,000h

CSG-2A-LW Series Ratings

Item / Size	Ratio	Rated Torque at 2000rpm		Limit for Repeated Peak Torque		Limit for Momentary Peak Torque	
		Nm	In-lb	Nm	In-lb	Nm	In-lb
14	50	7.0	62	23	204	46	407
	80	10	89	30	266	61	540
	100	10	89	36	319	70	620
17	50	21	186	44	389	91	805
	80	29	257	56	496	113	1000
	100	31	274	70	620	143	1266
	120	31	274	70	620	112	991
20	50	33	292	73	646	127	1124
	80	44	389	96	850	165	1460
	100	52	460	107	947	191	1690
	120	52	460	113	1000	191	1690
	160	52	460	120	1062	191	1690
25	50	51	451	127	1124	242	2142
	80	82	726	178	1575	332	2938
	100	87	770	204	1805	369	3266
	120	87	770	217	1920	395	3496
	160	87	770	229	2027	408	3611
32	50	99	876	281	2487	497	4398
	80	153	1354	395	3496	738	6531
	100	178	1575	433	3832	841	7443
	120	178	1575	459	4062	892	7894
	160	178	1575	484	4283	892	7894

Dimensions

Unit: mm

Symbol \ Size	14	17	20	25	32
ø A	50	60	70	85	110
B	28.5	32.5	33.5	37	44

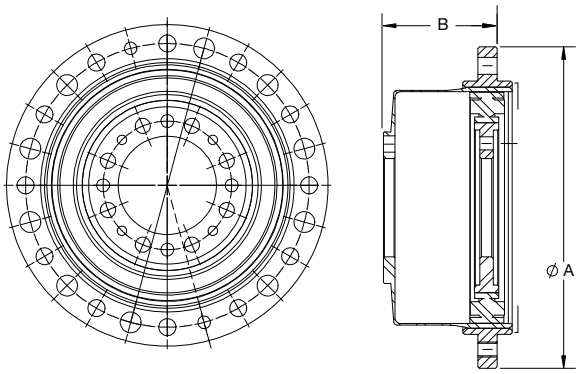

Cup Type - Super Flat

CSD-2A Series

The ultra-flat CSD precision gears are available in seven sizes, opening up new applications for motion control speed reducers.

- Zero backlash
- Extremely high positioning accuracy
- Excellent Repeatability
- Superior axial compactness
- Hollow through bore
- Also available with extra large through bore (BB)

L_{10} Life: 7,000h

CSD Series Ratings

Size \ Item	Ratio	Rated Torque at 2000 rpm	Limit for Repeated Peak Torque	Limit for Momentary Peak Torque
		Nm	Nm	Nm
14	50	3.7	12	24
	80	5.4	16	31
	100	5.4	19	31
17	50	11	23	48
	80	15	29	55
	100	16	37	55
20	50	17	39	69
	80	24	51	76 (65)
	100	28	57	76 (65)
25	50	27	69	127
	80	44	96	152 (135)
	100	47	110	152 (135)
32	50	53	151	268
	80	83	213	359 (331)
	100	96	233	359 (331)
40	50	96	281	480
	80	144	364	685 (580)
	100	185	398	694 (580)
50	50	172	500	1000
	80	260	659	1300
	100	329	686	1440 (1315)

Note: Values in (parenthesis) are for Big Bore (BB) version

Dimensions

Unit: mm

Symbol \ Size	14	17	20	25	32	40	50
ø A	50	60	70	85	110	135	170
B	11	12.5	14	17	22	27	33

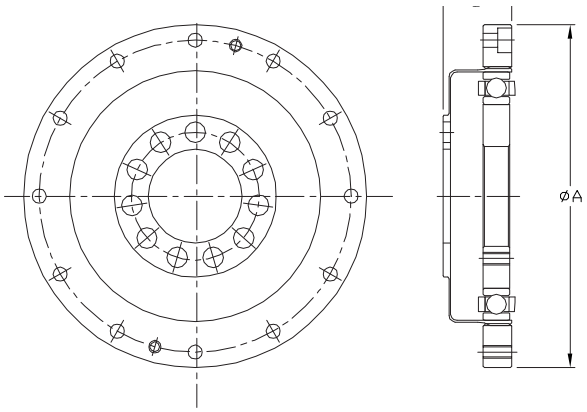

FB and FR Series

Pancake gears consist of four main parts: Wave Generator, Flexspline, Dynamic Spline, and Circular Spline. Extremely flat, these pancake gears offer the design engineer high ratios in extremely compact configurations.

- Flat profile
- Easily adapted to customer supplied assembly
- FB uses single wave generator bearing
- FR is heavy duty version of the FB
- FR uses double wave generator bearing

L_{10} Life: 3,000h

FB, FR Series Ratings

Size	Ratio	Rated Torque at 2000 rpm			
		FB Series		FR Series	
		Nm	In-lb	Nm	In-lb
14	50	2.6	23	4.4	39
	88	4.9	43	5.9	52
	100	5.9	52	7.8	69
	110	5.9	52	7.8	69
20	50	14	124	25	221
	80	17	150	34	301
	100	22	195	40	354
	128	24	212	40	354
	160	24	212	40	354
25	50	23	204	39	345
	80	31	274	56	496
	100	39	345	67	593
	120	39	345	67	593
	160	39	345	67	593
	200	-	-	67	593
32	50	44	389	76	673
	78	63	558	108	956
	100	82	726	137	1212
	131	82	726	137	1212
	157	82	726	137	1212
	200	-	-	137	1212
	260	-	-	137	1212
40	50	88	779	137	1212
	80	118	1044	196	1735
	100	157	1389	255	2257
	128	167	1478	294	2602
	160	167	1478	294	2602
	200	-	-	294	2602
	258	-	-	294	2602

Size	Ratio	Rated Torque at 2000 rpm			
		FB Series		FR Series	
		Nm	In-lb	Nm	In-lb
50	80	216	1912	363	3213
	100	284	2513	470	4160
	120	304	2690	559	4947
	160	304	2690	559	4947
	200	-	-	559	4947
	242	-	-	559	4947
65	78	-	-	745	6593
	104	-	-	1070	9470
	132	-	-	1070	9470
	158	-	-	1070	9470
	208	-	-	1070	9470
	260	-	-	1070	9470
80	80	-	-	1320	11682
	96	-	-	1660	14691
	128	-	-	2300	20355
	160	-	-	2350	20798
	194	-	-	2350	20798
	258	-	-	2350	20798
	320	-	-	2350	20798
100	80	-	-	2330	20621
	100	-	-	3200	28320
	120	-	-	3890	34427
	160	-	-	4470	39560
	200	-	-	4470	39560
	242	-	-	4470	39560
	320	-	-	4470	39560

Dimensions

Unit: mm

Size	Symbol	FB	FR
	ØA	B	C
14	50	10.5	18
20	70	12.5	25
25	85	16.5	29
32	110	20.5	37
40	135	27.0	43
50	170	33.0	53
65	215	-	71
80	265	-	83
100	330	-	101

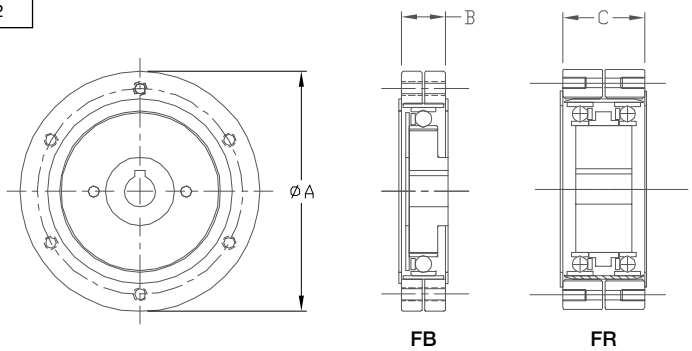

Silk Hat

SHF-2A Series

SHF is a silk hat, component set gear available with a large hollow through bore. It provides exceptional positioning accuracy in a compact design.

- Zero backlash
- Hollow bore units available
- Compact and simple design
- High torque capacity
- High positioning accuracy
- High torsional stiffness

L_{10} Life: 7,000h

SHF Series Ratings

Size \ Item	Ratio	Rated Torque at 2000rpm		Limit for Repeated Peak Torque		Limit for Momentary Peak Torque	
		Nm	In-lb	Nm	In-lb	Nm	In-lb
14	30	4.0	35	9.0	80	17	150
	50	5.4	48	18	159	35	310
	80	7.8	69	23	204	47	416
	100	7.8	69	28	248	54	478
17	30	8.8	78	16	142	30	266
	50	16	142	34	301	70	620
	80	22	195	43	381	87	770
	100	24	212	54	478	110	974
	120	24	212	54	478	86	761
20	30	15	133	27	239	50	443
	50	25	221	56	496	98	867
	80	34	301	74	655	127	1124
	100	40	354	82	726	147	1301
	120	40	354	87	770	147	1301
	160	40	354	92	814	147	1301
25	30	27	239	50	443	95	841
	50	39	345	98	867	86	1646
	80	63	558	137	1212	255	2257
	100	67	593	157	1389	284	2513
	120	67	593	167	1478	304	2690
	160	67	593	176	1558	314	2779
32	30	54	478	100	885	200	1770
	50	76	673	216	1912	382	3381
	80	118	1044	230	2036	568	5027
	100	137	1212	333	2947	647	5726
	120	137	1212	353	3124	686	6071
	160	137	1212	372	3292	686	6071

Size \ Item	Ratio	Rated Torque at 2000rpm		Limit for Repeated Peak Torque		Limit for Momentary Peak Torque	
		Nm	In-lb	Nm	In-lb	Nm	In-lb
40	50	137	1212	402	3558	686	6071
	80	206	1823	519	4593	980	8673
	100	265	2345	568	5027	1080	9558
	120	294	2602	617	5460	1180	10443
	160	294	2602	647	5726	1180	10443
45	50	176	1558	500	4425	950	8408
	80	313	2770	706	6248	1270	11240
	100	353	3124	755	6682	1570	13895
	120	402	3558	823	7284	1760	15576
	160	402	3558	882	7806	1910	16904
50	50	245	2168	715	6328	1430	12656
	80	372	3292	941	8328	1860	16461
	100	470	4160	980	8673	2060	18231
	120	529	4682	1080	9558	2060	18231
	160	529	4682	1180	10443	2450	21683
58	50	353	3124	020	9027	1960	17346
	80	549	4859	1480	13098	2450	21683
	100	696	6160	1590	14072	3180	28143
	120	745	6593	1720	15222	3330	29471
	160	745	6593	1840	16284	3430	30356

Dimensions

Unit: mm

Symbol \ Size	14	17	20	25	32	40	45	50	58
øA	50	60	70	85	110	135	155	170	195
B	28.5	32.5	33.5	37	44	53	58.5	64	75.5

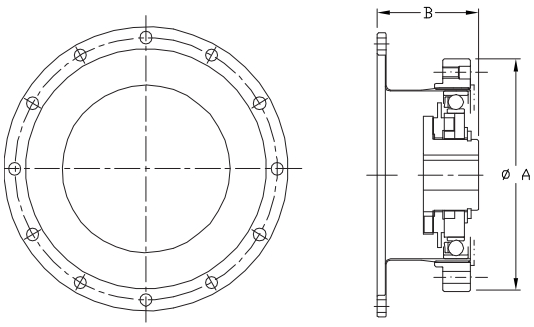

Silk Hat - High Torque

SHG-2A Series

SHG is a high torque, silk hat, component set gear available with a large hollow through bore. It provides exceptional positioning accuracy in a compact design.

- Zero backlash
- Hollow bore units available
- Excellent positioning accuracy
- Compact and simple design
- High torque capacity
- High torsional stiffness
- 30% higher torque rating than SHF series

L_{10} Life: 10,000h

Performance comparison of SHF and SHG Series Harmonic Drive® gearing

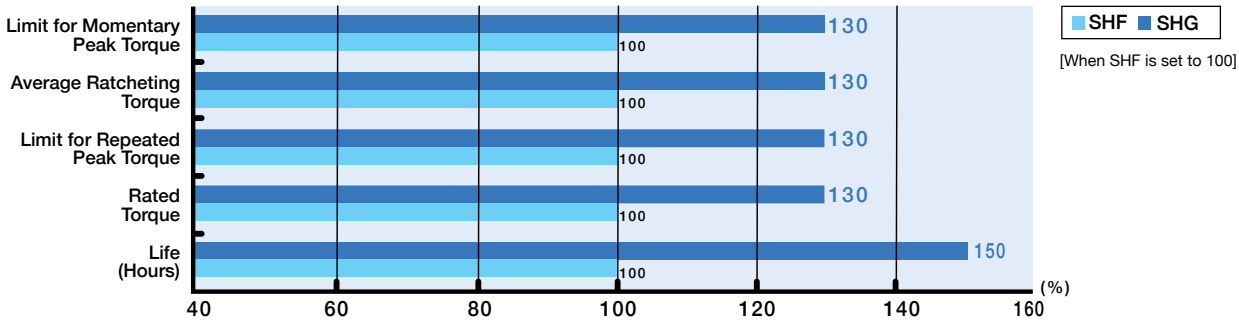

SHG Series Ratings

Size \ Item	Ratio	Rated Torque at 2000rpm		Limit for Repeated Peak Torque		Limit for Momentary Peak Torque	
		Nm	In-lb	Nm	In-lb	Nm	In-lb
14	50	7.0	62	23	204	46	407
	80	10	89	30	266	61	540
	100	10	89	36	319	70	620
17	50	21	186	44	389	91	805
	80	29	257	56	496	113	1000
	100	31	274	70	620	143	1266
	120	31	274	70	620	112	991
20	50	33	292	73	646	127	1124
	80	44	389	96	850	165	1460
	100	52	460	107	947	191	1690
	120	52	460	113	1000	191	1690
	160	52	460	120	1062	191	1690
25	50	51	451	127	1124	242	2142
	80	82	726	178	1575	332	2938
	100	87	770	204	1805	369	3266
	120	87	770	217	1920	395	3496
	160	87	770	229	2027	408	3611
32	50	99	876	281	2487	497	4398
	80	153	1354	395	3496	738	6531
	100	178	1575	433	3832	841	7443
	120	178	1575	459	4062	892	7894
	160	178	1575	484	4283	892	7894

Size \ Item	Ratio	Rated Torque at 2000rpm		Limit for Repeated Peak Torque		Limit for Momentary Peak Torque	
		Nm	In-lb	Nm	In-lb	Nm	In-lb
40	50	178	1575	523	4629	892	7894
	80	268	2372	675	5974	1270	11240
	100	345	3053	738	6531	1400	12390
	120	382	3381	802	7098	1530	13541
	160	382	3381	841	7443	1530	13541
45	50	229	2027	650	5753	1235	10930
	80	407	3602	918	8124	1651	14611
	100	459	4062	982	8691	2041	18063
	120	523	4629	1070	9470	2288	20249
	160	523	4629	1147	10151	2483	21975
50	80	484	4283	1223	10824	2418	21399
	100	611	5407	1274	11275	2678	23700
	120	688	6089	1404	12425	2678	23700
	160	688	6089	1534	13576	3185	28187
58	80	714	6319	1924	17027	3185	28187
	100	905	8009	2067	18293	4134	36586
	120	969	8576	2236	19789	4329	38312
	160	969	8576	2392	21169	4459	39462
65	80	969	8576	2743	24276	4836	42799
	100	1236	10939	2990	26462	6175	54649
	120	1236	10939	3263	28878	6175	54649
	160	1236	10939	3419	30258	6175	54649

Dimensions

Unit: mm

Symbol \ Size	14	17	20	25	32	40	45	50	58	65
øA	50	60	70	85	110	135	155	170	195	215
B	28.5	32.5	33.5	37	44	53	58.5	64	75.5	83

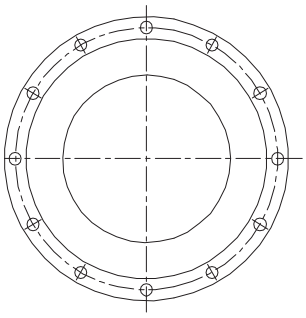

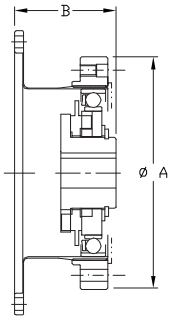

Gear Unit

CSF-2UH Series

CSF-2UH is a housed component gear set combined with a precision cross roller output bearing & flange. It is a very compact, robust and easy to use gearhead solution.

- Zero backlash
- Compact and simple design
- High torque capacity
- High torsional stiffness
- High positioning accuracy

L_{10} Life: 7,000h

CSF-2UH Series Ratings

Size \ Item	Ratio	Rated Torque at 2000rpm		Limit for Repeated Peak Torque		Limit for Momentary Peak Torque	
		Nm	In-lb	Nm	In-lb	Nm	In-lb
14	30	4.0	35	9.0	80	17	150
	50	5.4	48	18	159	35	310
	80	7.8	69	23	204	47	416
	100	7.8	69	28	248	54	478
17	30	8.8	78	6	142	30	266
	50	16	142	34	301	70	620
	80	22	195	43	381	87	770
	100	24	212	54	478	108	974
	120	24	212	54	478	86	761
20	30	15	133	27	239	50	443
	50	25	221	56	496	98	867
	80	34	301	74	655	127	1124
	100	40	354	82	726	147	1301
	120	40	354	87	770	147	1301
	160	40	354	92	814	147	1301
25	30	27	239	50	443	95	841
	50	39	345	98	867	186	1646
	80	63	558	137	1212	255	2257
	100	67	593	157	1389	284	2513
	120	67	593	167	1478	304	2690
	160	67	593	176	1558	314	2779
32	30	54	478	100	885	200	1770
	50	76	673	216	1912	382	3381
	80	118	1044	304	2036	568	5027
	100	137	1212	333	2947	647	5726
	120	137	1212	353	3124	686	6072
	160	137	1212	372	3292	686	6072

Size \ Item	Ratio	Rated Torque at 2000rpm		Limit for Repeated Peak Torque		Limit for Momentary Peak Torque	
		Nm	In-lb	Nm	In-lb	Nm	In-lb
40	50	137	1212	402	3558	686	6072
	80	206	1823	519	4593	980	8674
	100	265	2345	568	5027	1080	9559
	120	294	2602	617	5460	1180	10444
	160	294	2602	647	5726	1180	10444
45	50	176	1558	500	4425	950	8408
	80	313	2770	706	6248	1270	11240
	100	353	3124	755	6682	1570	13896
	120	402	3558	823	7284	1760	15577
	160	402	3558	882	7806	1910	16905
50	50	245	2168	715	6328	1430	12657
	80	372	3292	941	8328	1860	16462
	100	470	4160	980	8673	2060	18233
	120	529	4682	1080	9558	2060	18233
	160	529	4682	1180	10443	2450	21684
58	50	353	3124	1020	9027	1960	17347
	80	549	4859	1480	13098	2450	21684
	100	686	6160	1590	14072	3180	28145
	120	745	6593	1720	15222	3330	29473
	160	745	6593	1840	16284	3430	30358
65	50	490	4337	1420	12567	2830	25048
	80	745	6593	2110	18674	3720	32925
	100	951	8416	2300	20355	4750	42041
	120	951	8416	2510	22214	4750	42041
	160	951	8416	2630	23276	4750	42041

Cross Roller Bearing Specification

Size \ Item	Basic Rated Load				Allowable Moment Load Mc		Moment Stiffness Km	
	Basic Dynamic Rated Load C		Basic Static Rated Load Co					
	x 10^2N	lb	x 10^2N	lb	Nm	In-lb	x 10^4Nm /rad	In-lb/arc-min
14	47	1057	60.7	1365	41	363	4.38	113
17	52.9	1189	75.5	1697	64	566	7.75	200
20	57.8	1299	90.0	2023	91	805	12.8	330
25	96.0	2158	151	3394	156	1381	24.2	623
32	150	3372	250	5620	313	2770	53.9	1388
40	213	4788	365	8205	450	3983	91.0	2343
45	230	5170	426	9576	686	6071	141	3631
50	348	7823	602	13533	759	6717	171	4403
58	518	11645	904	20322	1180	10443	283	7287
65	556	12499	1030	23154	1860	16461	404	10403

- "Basic dynamic rated load" is a constant stationary radial load that achieves a basic dynamic rated life of the bearing of one million revolutions. "Basic static rated load" is a static load that achieves a contact stress of a constant level (408kN/mm2) at the center of a contact zone between the rolling element receiving a maximum load and track.
- The moment stiffnesses are mean values.

Dimensions

Unit: mm

Symbol \ Size	14	17	20	25	32	40	45	50	58	65
øA	73	79	93	107	138	160	180	190	226	260
B	41	45	45.5	52	62	72.5	79.5	90	104.5	115

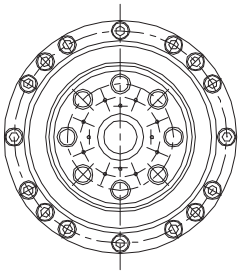

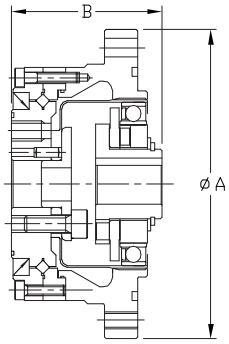

CSF-2UH-LW Series

LW indicates lightweight, the CSF-2UH is a housed component gear set combined with a precision cross roller output bearing & flange.

- Zero Backlash
- 30% average lower weight than Standard Series
- High Torque to Weight ratio
- Accuracy <1 arc-min
- High torsional stiffness
- High efficiency
- Robust cross roller output bearing
- Output flange for direct mounting of load

L_{10} Life: 7,000h

CSF-2UH-LW Series Ratings

Size \ Item	Ratio	Rated Torque at 2000rpm		Limit for Repeated Peak Torque		Limit for Momentary Peak Torque	
		Nm	In-lb	Nm	In-lb	Nm	In-lb
14	30	4.0	35	9.0	80	17	150
	50	5.4	48	18	159	35	310
	80	7.8	69	23	204	47	416
	100	7.8	69	28	248	54	478
17	30	8.8	78	16	142	30	266
	50	16	142	34	301	70	620
	80	22	195	43	381	87	770
	100	24	212	54	478	108	956
	120	24	212	54	478	86	761
20	30	15	133	27	239	50	443
	50	25	221	56	496	98	867
	80	34	301	74	655	127	1,124
	100	40	354	82	726	147	1,301
	120	40	354	87	770	147	1,301
	160	40	354	92	814	147	1,301
25	30	27	239	50	443	95	841
	50	39	345	98	867	186	1,646
	80	63	558	137	1,213	255	2,257
	100	67	593	157	1,390	284	2,514
	120	67	593	167	1,478	304	2,691
	160	67	593	176	1,558	314	2,779
32	30	54	478	100	885	200	1,770
	50	76	673	216	1,912	382	3,381
	80	118	1,044	304	2,691	568	5,027
	100	137	1,213	333	2,947	647	5,726
	120	137	1,213	353	3,124	686	6,072
	160	137	1,213	372	3,292	686	6,072

Size \ Item	Ratio	Rated Torque at 2000rpm		Limit for Repeated Peak Torque		Limit for Momentary Peak Torque	
		Nm	In-lb	Nm	In-lb	Nm	In-lb
40	50	137	1,213	402	3,558	686	6,072
	80	206	1,823	519	4,594	980	8,674
	100	265	2,345	568	5,027	1,080	9,559
	120	294	2,602	617	5,461	1,180	9,444
	160	294	2,602	647	5,726	1,180	10,444
45	50	176	1,558	500	4,425	950	8,408
	80	313	2,770	706	6,249	1,270	11,240
	100	353	3,124	755	6,682	1,570	13,896
	120	402	3,558	823	7,284	1,760	15,577
	160	402	3,558	882	7,806	1,910	16,905
50	50	245	2,168	715	6,328	1,430	12,657
	80	372	3,292	941	8,329	1,860	16,462
	100	470	4,160	980	8,674	2,060	18,233
	120	529	4,682	1,080	9,559	2,060	18,233
	160	529	4,682	1,180	10,444	2,450	21,684
58	50	353	3,124	1,020	9,028	1,960	17,347
	80	549	4,859	1,480	13,099	2,450	21,684
	100	696	6,160	1,590	14,073	3,180	28,145
	120	745	6,594	1,720	15,223	3,330	29,473
	160	745	6,594	1,840	16,285	3,430	30,358
65	50	490	4,337	1,420	12,568	2,830	25,048
	80	745	6,594	2,110	18,675	3,720	32,925
	100	951	8,417	2,300	20,357	4,750	42,041
	120	951	8,417	2,510	22,215	4,750	42,041
	160	951	8,417	2,630	23,277	4,750	42,041

Cross Roller Bearing Specification

Size \ Item	Basic Rated Load				Alowable Moment Load Mc		Moment Stiffness Km	
	Basic Dynamic Rated Load C		Basic Static Rated Load Co					
	x 10^2N	lb	x 10^2N	lb	Nm	In-lb	x 10^4Nm /rad	In-lb/arc-min
14	47	1,057	60.7	1,365	33.6	297	3.6	32
17	52.9	1,189	75.5	1,697	52.5	465	6.4	57
20	57.8	1,299	90.0	2,023	74.6	660	10.5	93
25	96.0	2,158	151	3,395	128	1,133	19.8	175
32	150	3,372	250	5,620	257	2,275	44.2	391
40	213	4,788	365	8,206	369	3,266	74.6	660
45	230	5,171	426	9,577	563	4,983	116	1,027
50	348	7,823	602	13,534	622	5,505	140	1,239
58	518	11,645	904	20,323	838	7,417	201	1,779
65	556	12,499	1030	23,155	1,525	13,497	331	2,930

- "Basic dynamic rated load" is a constant stationary radial load that achieves a basic dynamic rated life of the bearing of one million revolutions. "Basic static rated load" is a static load that achieves a contact stress of a constant level (408kN/mm2) at the center of a contact zone between the rolling element receiving a maximum load and track.
- The moment stiffnesses are mean values.

Dimensions

Unit: mm

Symbol \ Size	14	17	20	25	32	40	45	50	58	65
øA	73	79	93	107	138	160	180	190	226	260
B	41	45	45.5	52	62	72.5	79.5	90	104.5	115

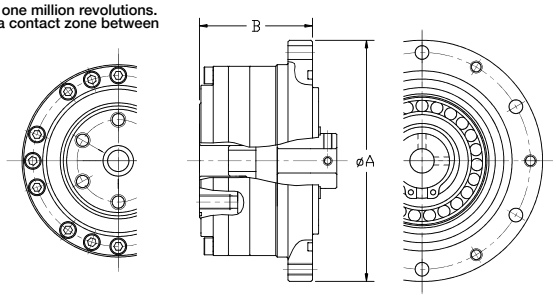

High Torque Gear Unit

CSG-2UH Series

CSG-2UH is a high torque housed component gear set combined with a precision cross roller output bearing & flange. It is a very compact, robust and easy to use gearhead solution.

- Zero backlash
- High torque capacity
- High torsional stiffness
- Compact and simple design
- High positioning accuracy
- 30% higher torque than a CSF unit

L_{10} Life: 10,000h

CSG-2UH Series Ratings

Size \ Item	Ratio	Rated Torque at 2000rpm		Limit for Repeated Peak Torque		Limit for Momentary Peak Torque	
		Nm	In-lb	Nm	In-lb	Nm	In-lb
14	50	7	62	23	204	46	407
	80	10	89	30	266	61	540
	100	10	89	36	319	70	620
17	50	21	186	44	389	91	805
	80	29	257	56	496	113	1000
	100	31	274	70	620	143	1266
	120	31	274	70	620	112	991
20	50	33	292	73	646	127	1124
	80	44	389	96	850	165	1460
	100	52	460	107	947	191	1690
	120	52	460	113	1000	191	1690
	160	52	460	120	1062	191	1690
25	50	51	451	127	1124	242	2142
	80	82	726	178	1575	332	2938
	100	87	770	204	1805	369	3266
	120	87	770	217	1920	395	3496
	160	87	770	229	2027	408	3611
32	50	99	876	281	2487	497	4399
	80	153	1354	395	3496	738	6532
	100	178	1575	433	3832	841	7443
	120	178	1575	459	4062	892	7895
	160	178	1575	484	4283	892	7895

Size \ Item	Ratio	Rated Torque at 2000rpm		Limit for Repeated Peak Torque		Limit for Momentary Peak Torque	
		Nm	In-lb	Nm	In-lb	Nm	In-lb
40	50	178	1575	523	4629	892	7895
	80	268	2372	675	5974	1270	11240
	100	345	3053	738	6531	1400	12391
	120	382	3381	802	7098	1530	13542
	160	382	3381	841	7443	1530	13542
45	50	229	2027	650	5753	1235	10931
	80	407	3602	918	8124	1651	14613
	100	459	4062	982	8691	2041	18064
	120	523	4629	1070	9470	2288	20250
	160	523	4629	1147	10151	2483	21976
50	80	484	4283	1223	10824	2418	21401
	100	611	5407	1274	11275	2678	23702
	120	688	6089	1404	12425	2678	23702
	160	688	6089	1534	13576	3185	28190
58	80	714	6319	1924	17027	3185	28190
	100	905	8009	2067	18293	4134	36589
	120	969	8576	2236	19789	4329	38315
	160	969	8576	2392	21169	4459	39465
65	80	969	8576	2743	24276	4836	42802
	100	1236	10939	2990	26462	6175	54653
	120	1236	10939	3263	28878	6175	54653
	160	1236	10939	3419	30258	6175	54653

Cross Roller Bearing Specification

Size \ Item	Basic Rated Load				Allowable Moment Load Mc		Moment Stiffness Km	
	Basic Dynamic Rated Load C		Basic Static Rated Load Co					
	x 10^2N	lb	x 10^2N	lb	Nm	In-lb	x 10^4Nm /rad	In-lb/arc-min
14	47	1057	60.7	1365	41	363	4.38	113
17	52.9	1189	75.5	1697	64	566	7.75	200
20	57.8	1299	90.0	2023	91	805	12.8	330
25	96.0	2158	151	3394	156	1381	24.2	623
32	150	3372	250	5620	313	2770	53.9	1388
40	213	4788	365	8205	450	3983	91.0	2343
45	230	5170	426	9576	686	6071	141	3631
50	348	7823	602	13533	759	6717	171	4403
58	518	11645	904	20322	1180	10443	283	7287
65	556	12499	1030	23154	1860	16461	404	10403

- "Basic dynamic rated load" is a constant stationary radial load that achieves a basic dynamic rated life of the bearing of one million revolutions. "Basic static rated load" is a static load that achieves a contact stress of a constant level (408kN/mm2) at the center of a contact zone between the rolling element receiving a maximum load and track.
- The moment stiffnesses are mean values.

Dimensions

Unit: mm

Symbol \ Size	14	17	20	25	32	40	45	50	58	65
øA	73	79	93	107	138	160	180	190	226	260
B	41	45	45.5	52	62	72.5	79.5	90	104.5	115

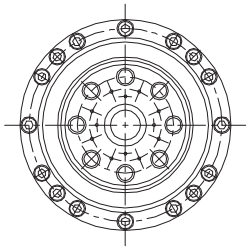

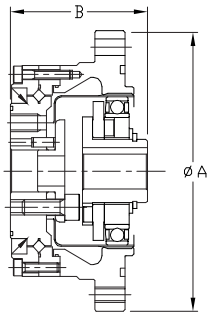

CSG-2UH-LW Series

LW indicates lightweight. CSG-2UH is a high torque housed component gear set combined with a precision cross roller output bearing & flange. It is a very compact, robust and easy to use gearhead solution.

- Zero Backlash
- 30% average lower weight than Standard Series
- High Torque to Weight ratio
- Accuracy <1 arc-min
- High torsional stiffness
- High efficiency
- Robust cross roller output bearing
- Output flange for direct mounting of load

L_{10} Life: 10,000h

CSG-2UH-LW Series Ratings

Size \ Item	Ratio	Rated Torque at 2000rpm		Limit for Repeated Peak Torque		Limit for Momentary Peak Torque	
		Nm	In-lb	Nm	In-lb	Nm	In-lb
14	50	7	62	23	204	46	407
	80	10	89	30	266	61	540
	100	10	89	36	319	70	620
17	50	21	186	44	389	91	805
	80	29	257	56	496	113	1,000
	100	31	274	70	620	143	1,266
	120	31	274	70	620	112	991
20	50	33	292	73	646	127	1,124
	80	44	389	96	850	165	1,460
	100	52	460	107	947	191	1,690
	120	52	460	113	1,000	191	1,690
	160	52	460	120	1,062	191	1,690
25	50	51	451	127	1,124	242	2,142
	80	82	726	178	1,575	332	2,938
	100	87	770	204	1,806	369	3,266
	120	87	770	217	1,921	395	3,496
	160	87	770	229	2,027	408	3,611
32	50	99	876	281	2,487	497	4,399
	80	153	1,354	395	3,496	738	6,532
	100	178	1,575	433	3,832	841	7,443
	120	178	1,575	459	4,062	892	7,895
	160	178	1,575	484	4,284	892	7,895

Size \ Item	Ratio	Rated Torque at 2000rpm		Limit for Repeated Peak Torque		Limit for Momentary Peak Torque	
		Nm	In-lb	Nm	In-lb	Nm	In-lb
40	50	178	1,575	523	4,629	892	7,895
	80	268	2,372	675	5,974	1,270	11,240
	100	345	3,054	738	6,532	1,400	12,391
	120	382	3,381	802	7,098	1,530	13,542
	160	382	3,381	841	7,443	1,530	13,542
45	50	229	2,027	650	5,753	1,235	10,931
	80	407	3,602	918	8,125	1,651	14,613
	100	459	4,062	982	8,691	2,041	18,064
	120	523	4,629	1,070	9,470	2,288	20,250
	160	523	4,629	1,147	10,152	2,483	21,976
50	80	484	4,284	1,223	10,824	2,418	21,401
	100	611	5,408	1,274	11,276	2,678	23,702
	120	688	6,089	1,404	12,426	2,678	23,702
	160	688	6,089	1,534	13,577	3,185	28,190
58	80	714	6,319	1,924	17,029	3,185	28,190
	100	905	8,010	2,067	18,294	4,134	36,589
	120	969	8,576	2,236	19,790	4,329	38,315
	160	969	8,576	2,392	21,171	4,459	39,465
65	80	969	8,576	2,743	24,278	4,836	42,802
	100	1,236	10,940	2,990	26,464	6,175	54,653
	120	1,236	10,940	3,263	28,880	6,175	54,653
	160	1,236	10,940	3,419	30,261	6,175	54,653

Cross Roller Bearing Specification

Size \ Item	Basic Rated Load				Allowable Moment Load		Moment Stiffness Km	
	Basic Dynamic Rated Load C		Basic Static Rated Load Co					
	x 10^2N	lb	x 10^2N	lb	Nm	In-lb	x 10^4Nm /rad	In-lb/arc-min
14	47	1,057	60.7	1,365	33.6	297	3.6	32
17	52.9	1,189	75.5	1,697	52.5	465	6.4	57
20	57.8	1,299	90.0	2,023	74.6	660	10.5	93
25	96.0	2,158	151	3,395	128	1,133	19.8	175
32	150	3,372	250	5,620	257	2,275	44.2	391
40	213	4,788	365	8,206	369	3,266	74.6	660
45	230	5,170	426	9,577	563	4,983	116	1,027
50	348	7,823	602	13,534	622	5,505	140	1,239
58	518	11,645	904	20,323	838	7,417	201	1,779
65	556	12,499	1030	23,155	1,525	13,497	331	2,930

Dimensions

Unit: mm

Symbol \ Size	14	17	20	25	32	40	45	50	58	65
øA	73	79	93	107	138	160	180	190	226	260
B	41	45	45.5	52	62	72.5	79.5	90	104.5	115

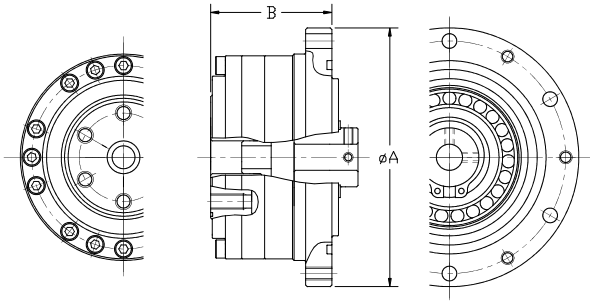

High Torque Gear Unit

CSG-2UK Series

CSG-2UK is a high torque fully sealed, high accuracy gear reducer ideally suited for machine tool applications.

- Zero backlash
- Compatible with Fanuc motors
- High torque capacity
- High torsional stiffness
- High positioning accuracy

L_{10} Life: 10,000h

CSG-2UK Series Ratings

Size \ Item	Ratio	Rated Torque at 2000rpm		Limit for Repeated Peak Torque		Limit for Momentary Peak Torque	
		Nm	In-lb	Nm	In-lb	Nm	In-lb
25	50	51	451	127	1124	242	2142
	80	82	726	178	1575	332	2938
	100	87	770	204	1805	369	3266
	120	87	770	217	1920	395	3496
	160	87	770	229	2027	408	3611
32	50	99	876	281	2487	497	4399
	80	153	1354	395	3496	738	6532
	100	178	1575	433	3832	841	7443
	120	178	1575	459	4062	892	7895
	160	178	1575	484	4283	892	7895
40	50	178	1575	523	4629	892	7895
	80	268	2372	675	5974	1270	11240
	100	345	3053	738	6531	1400	12391
	120	382	3381	802	7098	1530	13542
	160	382	3381	841	7443	1530	13542

Size \ Item	Ratio	Rated Torque at 2000rpm		Limit for Repeated Peak Torque		Limit for Momentary Peak Torque	
		Nm	In-lb	Nm	In-lb	Nm	In-lb
45	50	229	2027	650	5753	1235	10931
	80	407	3602	918	8124	1651	14613
	100	459	4062	982	8691	2041	18064
	120	523	4629	1070	9470	2288	20250
	160	523	4629	1147	10151	2483	21976
58	80	714	6319	1924	17027	3185	28190
	100	905	8009	2067	18293	4134	36589
	120	969	8576	2236	19789	4329	38315
	160	969	8576	2392	21169	4459	39465
65	80	969	8576	2743	24276	4836	42802
	100	1236	10939	2990	26462	6175	54653
	120	1236	10939	3263	28878	6175	54653
	160	1236	10939	3419	30258	6175	54653

Cross Roller Bearing Specification

Size \ Item	Basic Rated Load				Allowable Moment Load Mc		Moment Stiffness Km	
	Basic Dynamic Rated Load C		Basic Static Rated Load Co					
	x 10^2N	lb	x 10^2N	lb	Nm	In-lb	x 10^4Nm /rad	In-lb/arc-min
25	96.0	2158	151	3394	128	1133	19.8	512
32	150	3372	250	5620	257	2274	44.2	1137
40	213	4788	365	8205	369	3266	74.6	1918
45	230	5170	426	9576	563	4983	116	2986
58	518	11645	904	20322	838	7416	201	5173
65	556	12499	1030	23154	1525	13496	331	9374

- "Basic dynamic rated load" is a constant stationary radial load that achieves a basic dynamic rated life of the bearing of one million revolutions. "Basic static rated load" is a static load that achieves a contact stress of a constant level (408kN/mm2) at the center of a contact zone between the rolling element receiving a maximum load and track.
- The moment stiffnesses are mean values.

Dimensions

Unit: mm

Symbol \ Size	25	32	40	45	58	65
øA	107	138	160	180	226	260
B	66	75	85	102	120	129

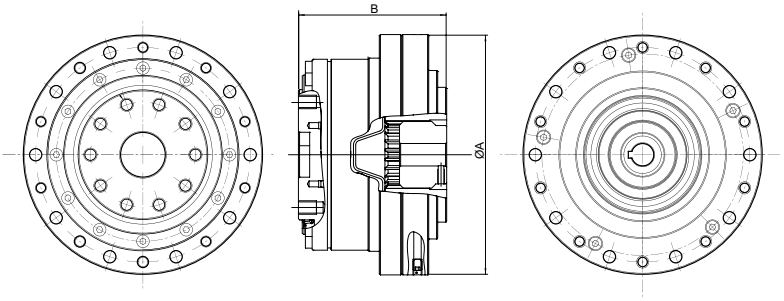

Large, Hollow-Shaft

FBS-2UH Series

This new Harmonic Drive® gear features a large, hollow shaft with a compact outer diameter. An extra large hollow shaft is ideal for robots and machines requiring complex cabling to pass through the axis of rotation. The new gear design features Harmonic Drive's "S" tooth profile for optimal tooth engagement resulting in high torque, high-torsional stiffness, long life and smooth rotation. The new FBS Series is available in two sizes (25, 32) and three ratios (30:1, 50:1, 100:1).

- Extra large hollow-shaft diameter is our largest yet for a standard product
- Compact dimensions for use in robotics
- Outer diameter and hollow bore optimized for design flexibility and performance

FBS Series Ratings

Size	Reduction Ratio	Rated torque at input speed 2000 rpm		Limit for repeated peak torque		Limit for average torque		Limit for momentary peak torque		Allowable maximum input speed	Limit for average input speed	Moment of inertia (GD2/4)
		Nm	kgfm	Nm	kgfm	Nm	kgfm	Nm	kgfm	rpm	rpm	kgcm²
25	30	15	1.5	25	2.5	24	2.4	50	5.1	3600	2500	1.0
	50	22	2.2	47	4.8	35	3.6	93	9.5			
	100	37	3.8	70	7.1	59	6.0	100	10.2			
32	30	30	3.1	48	4.9	48	4.9	96	9.8		2300	3.3
	50	43	4.4	92	9.4	67	6.8	151	15.4			
	100	36	5.7	106	10.8	89	91	151	15.4			

Main Bearing Specifications

Size	Pitch Circle	Offset	Basic rated load				Allowable moment load Mc		Moment stiffness Km	
	dp	R	Basic dynamic load rating C		Basic static load rating C0					
	m	m	×10² N	kgf	×10² N	kgf	Nm	kgfm	x 10⁴ Nm/rad	kgfm/arc min
25	0.070	0.011	73	744	110	1122	93	9.5	21	6.2
32	0.086	0.0121	109	1111	179	1825	129	13.2	31	9.2

Dimensions

Unit: mm

Size \ Symbol	ϕA	B	ϕC	ϕD	E	Weight (kg)
25	93	53.1	41	78	45.5	1.3
32	113	62.5	55.1	96	60	2.2

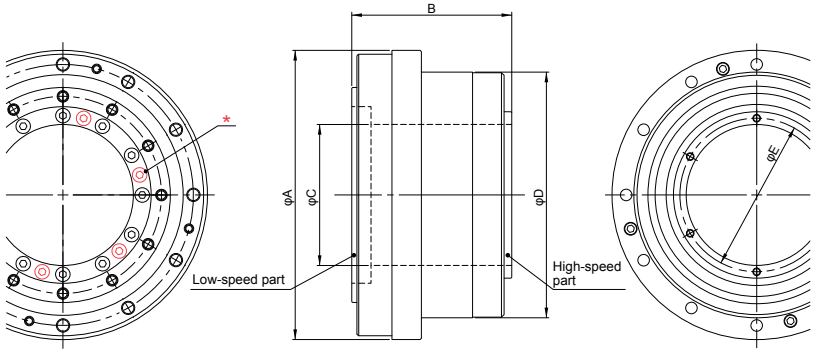

* The bolts (6 pcs) in red will be added for reduction ratio 100.

Ultra-Flat Gear Unit

CSD-2UH Series

Available in 7 sizes with ratios 50:1 to 120:1, CSD-2UH is an ultra-thin and compact housed gear component unit.

- Zero Backlash
- Lightweight
- Ultra-flat
- Compact and simple design

L_{10} Life: 7,000h

CSD-2UH Series Ratings

Size	Ratio	Rated Torque at 2000rpm	Limit for Repeated Peak Torque	Limit for Average Torque	Limit for Momentary Peak Torque
		Nm	Nm	Nm	Nm
14	50	3.7	12	4.8	24
	80	5.4	16	7.7	35
	100	5.4	19	7.7	35
17	50	11	23	18	48
	80	15	29	19	61
	100	16	37	27	71
	120	16	37	27	71
20	50	17	39	24	69
	80	24	51	33	89
	100	28	57	34	95
	120	28	60	34	95
25	50	27	69	38	127
	80	44	96	60	179
	100	47	110	75	184
	120	47	117	75	204

Size	Ratio	Rated Torque at 2000rpm	Limit for Repeated Peak Torque	Limit for Average Torque	Limit for Momentary Peak Torque
		Nm	Nm	Nm	Nm
32	50	53	151	75	268
	80	83	213	117	398
	100	96	233	151	420
	120	96	247	151	445
40	50	96	281	137	480
	80	144	364	198	686
	100	185	398	260	700
	120	205	432	315	765
50	50	172	500	247	1000
	80	260	659	363	1300
	100	329	686	466	1440
	120	370	756	569	1565

Cross Roller Bearing Specification

Item / Size	Basic Rated Load				Allowable Moment Load Mc		Moment Stiffness Km	
	Basic Dynamic Rated Load C		Basic Static Rated Load Co					
	x10²N	lb	x10²N	lb	Nm	In-lb	x10⁴Nm/rad	In-lb/arc.min
14	47	1057	60.7	1365	41	363	3.48	90
17	52.9	1189	75.5	1697	64	566	7.75	200
20	57.8	1299	90	2023	91	805	12.8	330
25	96	2158	151	3394	156	1381	24.2	623
32	150	3372	250	5620	313	2770	53.9	1388
40	213	4788	365	8205	450	3983	91	2343
50	348	7823	602	13533	759	6717	171	4403

Dimensions

Unit: mm

Symbol \ Size	14	17	20	25	32	40	50
øA h7	55	62	70	85	112	126	157
B	25	26.5	29.5	37.1	43	51.7	62.5

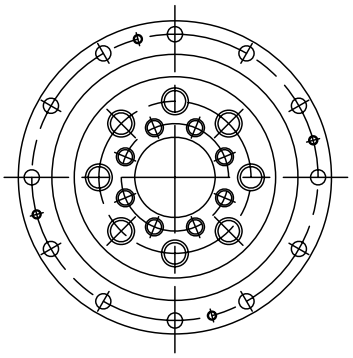

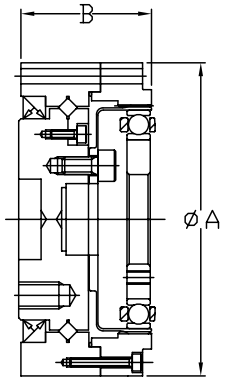

CSD-2UF Series

Available in 6 sizes with ratios 50:1 to 120:1, CSD-2UF is an ultra-thin and compact housed gear component unit with a hollow through bore.

- Zero Backlash
- Hollow shaft
- High load capacity
- Lightweight
- Ultra-flat
- Compact and simple design

L_{10} Life: 7,000h

CSD-2UF Series Ratings

Size	Ratio	Rated Torque at 2000rpm	Limit for Repeated Peak Torque	Limit for Average Torque	Limit for Momentary Peak Torque
		Nm	Nm	Nm	Nm
14	50	3.7	12	4.8	24
	80	5.4	16	7.7	35
	100	5.4	19	7.7	35
17	50	11	23	18	48
	80	15	29	19	61
	100	16	37	27	71
	120	16	37	27	71
20	50	17	39	24	69
	80	24	51	33	89
	100	28	57	34	95
	120	28	60	34	95
25	50	27	69	38	127
	80	44	96	60	179
	100	47	110	75	184
	120	47	117	75	204

Size	Ratio	Rated Torque at 2000rpm	Limit for Repeated Peak Torque	Limit for Average Torque	Limit for Momentary Peak Torque
		Nm	Nm	Nm	Nm
32	50	53	151	75	268
	80	83	213	117	398
	100	96	233	151	420
	120	96	247	151	445
40	50	96	281	137	480
	80	144	364	198	686
	100	185	398	260	700
	120	205	432	315	765
50	50	172	500	247	1000
	80	260	659	363	1300
	100	329	686	466	1440
	120	370	756	569	1565

Cross Roller Bearing Specification

Item / Size	Basic Rated Load				Allowable Moment Load Mc		Moment Stiffness Km	
	Basic Dynamic Rated Load C		Basic Static Rated Load Co					
	$x10^2$N	lb	$x10^2$N	lb	Nm	In-lb	$x10^4$Nm/rad	In-lb/arc.min
14	57.8	1299	90	2023	91	805	12.8	330
17	104	2338	163	3664	124	1097	15.4	397
20	146	3282	220	4946	187	1655	25.2	649
25	218	4901	358	8048	258	2283	39.2	1009
32	382	8587	654	14702	580	5133	100	2575
40	433	9734	816	18344	849	7514	179	4609

Dimensions

Unit: mm

Symbol \ Size	14	17	20	25	32	40
øA h7	70	80	90	110	142	170
B	22	22.7	26.8	31.5	37	45

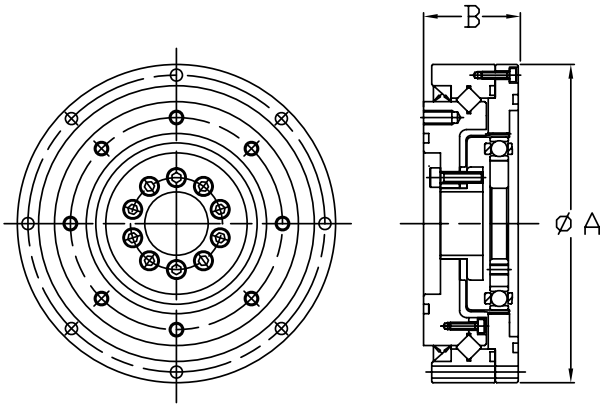

Ultra Lightweight Gearhead

CSF-2UH-ULW Series

Introducing CSF-2UH-ULW ultra-lightweight gearhead. This series features a newly engineered lightweight structure with an ultra-compact shape. The ULW line maintains the same performance standards as the CSF-2UH series. Ideal for use on end of arm axes for small industrial and collaborative robots, the CSF-2UH-ULW is also well suited for general industrial machinery where weight is a critical factor.

- Zero backlash
- Compact design
- High torque capacity
- High torsional stiffness
- High positioning accuracy
- New ultra-lightweight version

L_{10} Life: 7,000h

CSF-2UH-ULW Series Ratings

Size	Ratio	Rated Torque at input Speed 2000 rpm	Limit for Repeated Peak Torque	Limit for Average Torque	Limit for Momentary Peak Torque	Allowable Maximum Input Speed	Allowable Average Input Speed	Moment of Inertia (1/4GD^2)
		N·m	N·m	N·m	N·m	rpm	rpm	kg·m^2
8	30	0.9	1.8	1.4	3.3	8500	3500	1.7×10^{-7}
	50	1.8	3.3	2.3	6.6			
	100	2.4	4.8	3.3	9.0			
11	30	2.2	4.5	3.4	8.5	8500	3500	8.6×10^{-7}
	50	3.5	8.3	5.5	17			
	100	5.0	11	8.9	25			
14	50	5.4	18	6.9	35	8500	3500	2.2×10^{-6}
	80	7.8	23	11	47			
	100	7.8	28	11	54			
17	50	16	34	26	70	7300	3500	5.5×10^{-6}
	80	22	43	27	87			
	100	24	54	39	108			
	120	24	54	39	86			
20	50	25	56	34	98	6500	3500	1.1×10^{-5}
	80	34	74	47	127			
	100	40	82	49	147			
	120	40	87	49	147			
	160	40	92	49	147			

Main Bearing Specifications

Size	Basic Rated Load		Allowable Moment Load Mc	Moment Stiffness Km
	Basic dynamic load rating C	Basic static load rating C0		
	N	N	N·m	N·m/rad
8	1.8×10^3	2.2×10^3	8.7	1.0×10^4
11	2.8×10^3	3.5×10^3	14	1.7×10^4
14	3.9×10^3	5.0×10^3	26	3.0×10^4
17	5.2×10^3	7.0×10^3	40	4.6×10^4
20	6.7×10^3	9.4×10^3	56	6.5×10^4

* The basic dynamic load rating is a constant static radial load that provides a basic dynamic rating life of bearings to reach 1 million rotations.
* The basic static load rating is the static load that gives a certain level of contact stress (4.2kN/mm^2) at the center of the contact area between the rolling element receiving the maximum load.
* The allowable moment load is the maximum moment load that can be applied to the output shaft. Within this range, the basic performance is maintained, and the operation is possible for this value.
* Moment stiffness is a reference value, and the lower limit is approximately 80% of the displayed value. The lower limit value is approximately 80% of the displayed value.

Dimensions

Unit: mm

Symbol \ Size	8	11	14	17	20
øA h7	54	63	71	81	93
B	19	21.5	25.5	28.5	31.5

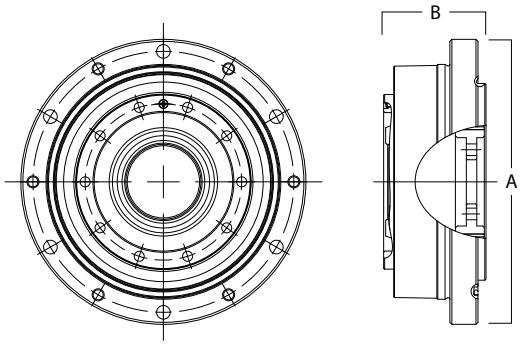

Ultra-Flat Compact Gearhead

CSF-2UP Mini Series

The CSF-2UP gear units have an ultra-flat configuration with high-moment stiffness. The new models are lightweight and extremely flat. Thanks to a cross roller bearing used at the output flange, the CSF-2UP gearheads offer high-moment stiffness.

- Zero backlash
- High positioning accuracy
- Compact and lightweight
- High torque capacity
- High radial, axial, and moment load capacity
- Cross roller bearing
- Ratios: 30:1 to 100:1

L_{10} Life: 7,000h

CSF Mini Series Ratings

Item / Size	Ratio	Rated Torque at 2000 rpm		Limit for Repeated Peak Torque		Limit for Momentary Peak Torque	
		Nm	In-lb	Nm	In-lb	Nm	In-lb
8	30	0.9	8.0	1.8	16	3.3	29
	50	1.8	16	3.3	29	6.6	58
	100	2.4	21	4.8	42	9	80
11	30	2.2	19	4.5	40	8.5	75
	50	3.5	31	8.3	73	17	150
	100	5	44	11	97	25	221
14	30	4	35	9	80	17	150
	50	5.4	48	18	159	35	310
	100	7.8	69	28	248	54	478

Cross Roller Bearing Specification

Item / Size	Basic Rated Load				Allowable Moment Load Mc		Moment Stiffness Km	
	Basic Dynamic Rated Load C		Basic Static Rated Load Co					
	x10²N	lb	x10²N	lb	Nm	In-lb	Nm/rad	In-lb/arc.min
8	58	1305	80	1800	15	133	2.0×10^4	52
11	65	1462	99	2228	40	354	4.0×10^4	104
14	74	1665	128	2880	75	664	8.0×10^4	208

Dimensions

Unit: mm

Symbol / Size	8	11	14
øA h7	49	59	74
B	24.8	27	33.5
C	51	61	76

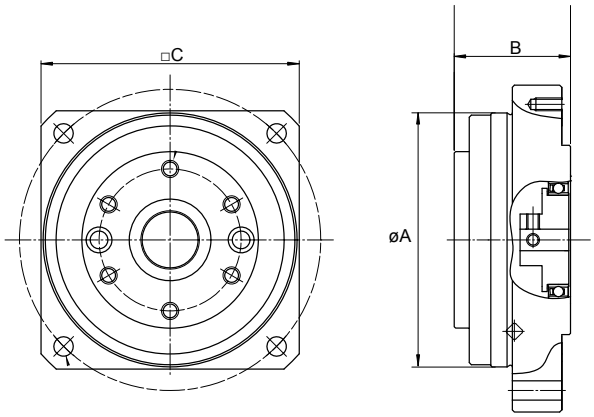

Compact Gearhead

CSF Mini and Supermini Series

CSF mini gearheads provide high positioning accuracy in a super-compact package. Compact 4-point contact ball bearing is mounted in the main shaft. Available in five sizes and four ratios, the CSF mini gearheads feature shaft or flange outputs.

- Zero backlash
- High positioning accuracy
- Compact and lightweight
- High torque capacity
- High radial, axial, and moment load capacity
- 4 point contact bearing
- Ratios: 30:1 to 100:1
- Flange output, shaft output, shaft input and output

L_{10} Life: 7,000h

CSF Mini and Supermini Series Ratings

Size \ Item	Ratio	Rated Torque at 2000 rpm		Limit for Repeated Peak Torque		Limit for Momentary Peak Torque	
		Nm	In-lb	Nm	In-lb	Nm	In-lb
3	30	0.06	0.53	0.13	1.15	0.22	1.95
	50	0.11	0.97	0.21	1.86	0.41	3.63
	100	0.16	1.42	0.3	2.66	0.57	5.04
5	30	0.25	2.2	0.5	4.4	0.9	8.0
	50	0.4	3.5	0.9	8.0	1.8	16
	100	0.6	5.3	1.4	12.4	2.7	24
8	30	0.9	8.0	1.8	16	3.3	29
	50	1.8	16	3.3	29	6.6	58
	100	2.4	21	4.8	42	9	80
11	30	2.2	19	4.5	40	8.5	75
	50	3.5	31	8.3	73	17	150
	100	5	44	11	97	25	221
14	30	4	35	9	80	17	150
	50	5.4	48	18	159	35	310
	80	7.8	69	23	204	47	416
	100	7.8	69	28	248	54	478

4Point Contact Bearing Specification

Size \ Item	Basic Rated Load				Allowable Moment Load Mc		Moment Stiffness Km	
	Basic Dynamic Rated Load C		Basic Static Rated Load Co					
	$x10^2$N	lb	$x10^2$N	lb	Nm	In-lb	Nm/rad	In-lb/arc.min
3	6.65	149	4.24	95	0.27	2	$0.9x10^2$	0.2
5	9.14	205	7.63	172	0.89	8	$7.41x10^2$	1.9
8	21.6	486	19.0	427	3.46	31	$2.76x10^3$	1.7
11	38.9	874	35.4	796	6.6	58	$7.41x10^3$	19.0
14	61.2	1376	58.5	1315	13.2	117	$1.34x10^4$	34.5

Dimensions (CSF-2XH-F)

Unit: mm

Symbol \ Size	3*	5	8	11	14
øA	17.5	29	43.5	58	73
B	20.5	17	28.7	38.3	45
C	13	22	32	43	53

* Size 3 dimensions for CSF-1UCC

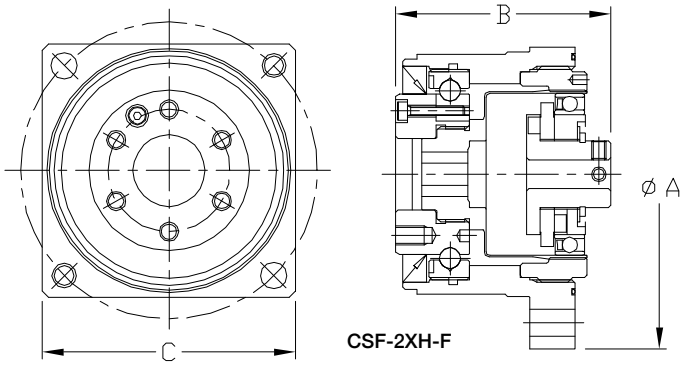

CSF-2XH-F

Structure

Input Shaft Version

This unit can be driven by a belt, coupling or a gear mounted on the input shaft. Available with shaft output or flange output.

Shaft output: 1U

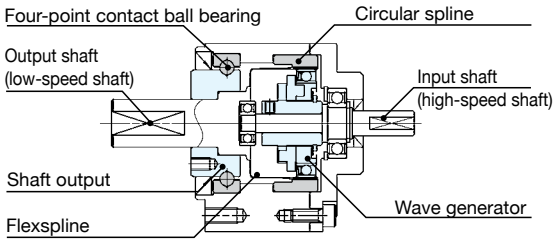

Flange output: 1U-F

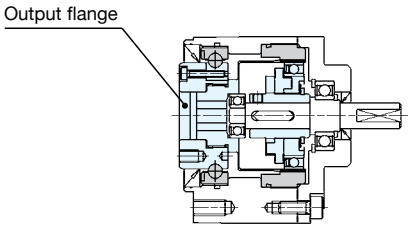

Motor Mounting Version

This gearhead is designed to be mounted to a motor, with the use of an adapter plate.

1U shaft output: 1U-CC

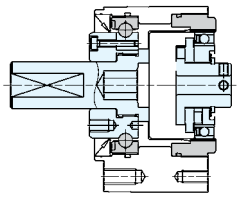

1U flange output: 1U-CC-F

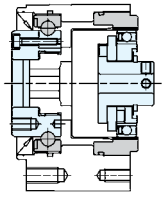

Square flange version: 2XH-J

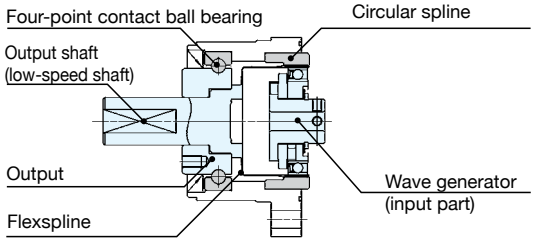

Flange output: 2XH-F

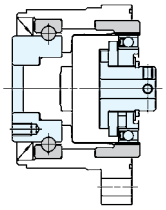

* The rotational direction of the output shaft is opposite to that of the input shaft (wave generator) when the housing is fixed.

Gear unit with hollow shaft or solid input shaft

SHF-2UH/2UJ Series

Incorporating a Harmonic Drive® gear component into an integral housing, the SHF-2UH is a compact hollow shaft gearhead with zero backlash.

- Zero backlash
- Large hollow through bore (2UH)
- High positioning accuracy
- Compact and simple design
- High torque capacity
- High torsional stiffness
- Shaft input units available (SHF-2UJ)

L_{10} Life: 7,000h

SHF Series Ratings

Size \ Item	Ratio	Rated Torque at 2000rpm		Limit for Repeated Peak Torque		Limit for Momentary Peak Torque	
		Nm	In-lb	Nm	In-lb	Nm	In-lb
11	50	3.5	31	8.3	73	17	150
	100	5	44	11	97	25	221
14	30	4.0	35	9.0	80	17	150
	50	5.4	48	18	159	35	310
	80	7.8	69	23	204	47	416
	100	7.8	69	28	248	54	478
17	30	8.8	78	16	142	30	266
	50	16	142	34	301	70	620
	80	22	195	43	381	87	770
	100	24	212	54	478	110	974
	120	24	212	54	478	86	761
20	30	15	133	27	239	50	443
	50	25	221	56	496	98	867
	80	34	301	74	655	127	1124
	100	40	354	82	726	147	1301
	120	40	354	87	770	147	1301
	160	40	354	92	814	147	1301
25	30	27	239	50	443	95	841
	50	39	345	98	867	186	1646
	80	63	558	137	1212	255	2257
	100	67	593	157	1389	284	2514
	120	67	593	167	1478	304	2691
	160	67	593	176	1558	314	2779

Size \ Item	Ratio	Rated Torque at 2000rpm		Limit for Repeated Peak Torque		Limit for Momentary Peak Torque	
		Nm	In-lb	Nm	In-lb	Nm	In-lb
32	30	54	478	100	885	200	1770
	50	76	673	216	1912	382	3381
	80	118	1044	230	2036	568	5027
	100	137	1212	333	2947	647	5726
	120	137	1212	353	3124	686	6072
	160	137	1212	372	3292	686	6072
40	50	137	1212	402	3558	686	6072
	80	206	1823	519	4593	980	8674
	100	265	2345	568	5027	1080	9559
	120	294	2602	617	5460	1180	10444
	160	294	2602	647	5726	1180	10444
45	50	176	1558	500	4425	950	8408
	80	313	2770	706	6248	1270	11240
	100	353	3124	755	6682	1570	13896
	120	402	3558	823	7284	1760	15577
	160	402	3558	882	7806	1910	16905
50	50	245	2168	715	6328	1430	12657
	80	372	3292	941	8328	1860	16462
	100	470	4160	980	8673	2060	18233
	120	529	4682	1080	9558	2060	18233
	160	529	4682	1180	10443	2450	21684
58	50	353	3124	1020	9027	1960	17347
	80	549	4859	1480	13098	2450	21684
	100	686	6160	1590	14072	3180	28145
	120	745	6593	1720	15222	3330	29473
	160	745	6593	1840	16284	3430	30358

Cross Roller Bearing Specification

Size \ Item	Basic Rated Load				Allowable Moment Load Mc		Moment Stiffness Km	
	Basic Dynamic Rated Load C		Basic Static Rated Load Co					
	x 10^2N	lb	x 10^2N	lb	Nm	In-lb	x 10^4Nm /rad	In-lb/arc-min
11	52.9	1189	75.5	1697	74	655	6.5	167
14	58	1304	86	1933	74	655	8.5	219
17	104	2338	163	3664	124	1097	15.1	389
20	146	3282	220	4946	187	1655	25.2	649
25	218	4901	358	8048	258	2283	39.2	1009
32	382	8587	654	14702	580	5133	100	2575
40	433	9734	816	18344	849	7514	179	4609
45	776	17444	1350	30348	1127	9974	257	6618
50	816	18344	1490	33495	1487	13160	351	9038
58	874	19648	1710	38441	2180	19293	531	13673

"Basic dynamic rated load" is a constant stationary radial load that achieves a basic dynamic rated life of the bearing of one million revolutions. "Basic static rated load" is a static load that achieves a contact stress of a constant level (408kN/mm2) at the center of a contact zone between the rolling element receiving a maximum load and track.

Dimensions (2UH)

Unit: mm

Symbol \ Size	11	14	17	20	25	32	40	45	50	58
øA	64	74	84	95	115	147	175	195	220	246
B	48	52.5	56.5	51.5	55.5	65.5	79	85	93	106
C	45.3	54	64	75	90	115	140	160	175	201

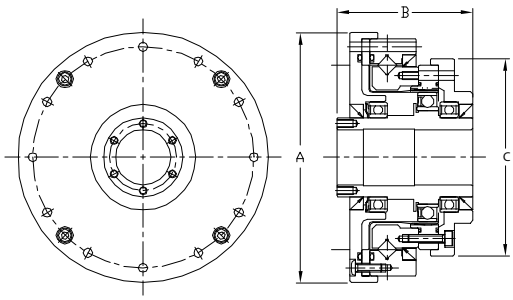

Lightweight gear unit with hollow shaft

SHF-2UH-LW Series

LW indicates lightweight. Incorporating a Harmonic Drive® gear component into an integral housing, the SHF-2UH-LW is a lightweight, compact hollow shaft gearhead with zero backlash.

- Zero backlash
- 20% lighter than standard unit
- Large hollow through bore
- High positioning accuracy
- High torque capacity
- High torsional stiffness

L_{10} Life: 7,000h

SHF-2UH-LW Series Ratings

Size \ Item	Ratio	Rated Torque at 2000rpm		Limit for Repeated Peak Torque		Limit for Momentary Torque	
		Nm	In-lb	Nm	In-lb	Nm	In-lb
14	30	4.0	35	9.0	80	17	150
	50	5.4	48	18	159	35	310
	80	7.8	69	23	204	47	416
	100	7.8	69	28	248	54	478
17	30	8.8	78	16	142	30	266
	50	16	142	34	301	70	620
	80	22	195	43	381	87	770
	100	24	212	54	478	108	956
	120	24	212	54	478	86	761
20	30	15	133	27	239	50	443
	50	25	221	56	496	98	867
	80	34	301	74	655	127	1,124
	100	40	354	82	726	147	1,301
	120	40	354	87	770	147	1,301
	160	40	354	92	814	147	1,301
25	30	27	239	50	443	95	841
	50	39	345	98	867	186	1,646
	80	63	558	137	1,213	255	2,257
	100	67	593	157	1,390	284	2,514
	120	67	593	167	1,478	304	2,691
	160	67	593	176	1,558	314	2,779
32	30	54	478	100	885	200	1,770
	50	76	673	216	1,912	382	3,381
	80	118	1,044	304	2,691	568	5,027
	100	137	1,213	333	2,947	647	5,726
	120	137	1,213	353	3,124	686	6,072
	160	137	1,213	372	3,292	686	6,072

Size \ Item	Ratio	Rated Torque at 2000rpm		Limit for Repeated Peak Torque		Limit for Momentary Torque	
		Nm	In-lb	Nm	In-lb	Nm	In-lb
40	50	137	1,213	402	3,558	686	6,072
	80	206	1,823	519	4,594	980	8,674
	100	265	2,345	568	5,027	1,080	9,559
	120	294	2,602	617	5,461	1,180	10,444
	160	294	2,602	647	5,726	1,180	10,444
45	50	176	1,558	500	4,425	950	8,408
	80	313	2,770	706	6,249	1,270	11,240
	100	353	3,124	755	6,682	1,570	13,896
	120	402	3,558	823	7,284	1,760	15,577
	160	402	3,558	882	7,806	1,910	16,905
50	50	245	2,168	715	6,328	1,430	12,657
	80	372	3,292	941	8,329	1,860	16,462
	100	470	4,160	980	8,674	2,060	18,233
	120	529	4,682	1,080	9,559	2,060	18,233
	160	529	4,682	1,180	10,444	2,450	21,684
58	50	353	3,124	1,020	9,028	1,960	17,347
	80	549	4,859	1,480	13,099	2,450	21,684
	100	696	6,160	1,590	14,073	3,180	28,145
	120	745	6,594	1,720	15,223	3,330	29,473
	160	745	6,594	1,840	16,285	3,430	30,358

Cross Roller Bearing Specification

Size \ Item	Basic Rated Load				Allowable Moment Load Mc		Moment Stiffness Km	
	Basic Dynamic Rated Load C		Basic Static Rated Load Co					
	x 10^2N	lb	x 10^2N	lb	Nm	In-lb	x 10^4Nm /rad	In-lb/arc-min
14	58	1,304	86	1,933	74	655	8.5	75
17	104	2,338	163	3,664	124	1,097	15.4	136
20	146	3,282	220	4,946	187	1,655	25.2	223
25	218	4,901	358	8,048	258	2,283	39.2	347
32	382	8,588	654	14,703	580	5,133	100	885
40	433	9,734	816	18,344	849	7,514	179	1,584
45	776	17,445	1,350	30,349	1,127	9,975	257	2,275
50	816	18,344	1,490	33,497	1,487	13,161	351	3,107
58	874	19,648	1,710	38,442	2,180	19,295	531	4,700

"Basic dynamic rated load" is a constant stationary radial load that achieves a basic dynamic rated life of the bearing of one million revolutions.
"Basic static rated load" is a static load that achieves a contact stress of a constant level (408kN/mm2) at the center of a contact zone between the rolling element receiving a maximum load and track.

Dimensions

Unit: mm

Symbol \ Size	14	17	20	25	32	40	45	50	58
øA	74	84	95	115	147	175	195	220	246
B	52.5	56.5	51.5	55.5	65.5	79	85	93	106
C	52	62	73	88	115	140	160	168	195

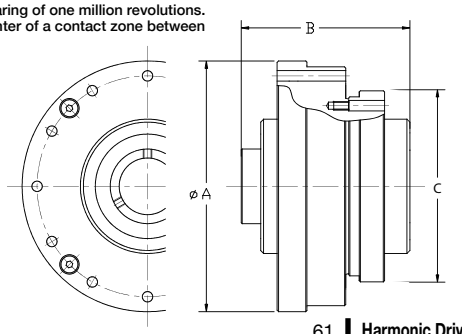

High torque gear unit with hollow shaft or solid input shaft

SHG-2UH /2UJ Series

The SHG-2UH series with a hollow shaft is a high torque, compact, precision gearhead with zero backlash and exceptional accuracy and repeatability.

- Zero backlash
- Large hollow through bore (2UH)
- High positioning accuracy
- High torque capacity
- High torsional stiffness
- Shaft input units available (SHG-2UJ)
- 30% increased torque compared to SHF Units

L_{10} Life: 10,000h

SHG Series Ratings

Size \ Item	Ratio	Rated Torque at 2000rpm		Limit for Repeated Peak Torque		Limit for Momentary Peak Torque	
		Nm	In-lb	Nm	In-lb	Nm	In-lb
14	50	7.0	62	23	204	46	407
	80	10	89	30	266	61	540
	100	10	89	36	319	70	620
17	50	21	186	44	389	91	805
	80	29	257	56	496	113	1000
	100	31	274	70	620	143	1266
	120	31	274	70	620	112	991
20	50	33	292	73	646	127	1124
	80	44	389	96	850	165	1460
	100	52	460	107	947	191	1690
	120	52	460	113	1000	191	1690
	160	52	460	120	1062	191	1690
25	50	51	451	127	1124	242	2142
	80	82	726	178	1575	332	2938
	100	87	770	204	1805	369	3266
	120	87	770	217	1920	395	3496
	160	87	770	229	2027	408	3611
32	50	99	876	281	2487	497	4399
	80	153	1354	395	3496	738	6532
	100	178	1575	433	3832	841	7443
	120	178	1575	459	4062	892	7895
	160	178	1575	484	4283	892	7895

Size \ Item	Ratio	Rated Torque at 2000rpm		Limit for Repeated Peak Torque		Limit for Momentary Peak Torque	
		Nm	In-lb	Nm	In-lb	Nm	In-lb
40	50	178	1575	523	4629	892	7895
	80	268	2372	675	5974	1270	11240
	100	345	3053	738	6531	1400	12391
	120	382	3381	802	7098	1530	13542
	160	382	3381	841	7443	1530	13542
45	50	229	2027	650	5753	1235	10931
	80	407	3602	918	8124	1651	14613
	100	459	4062	982	8691	2041	18064
	120	523	4629	1070	9470	2288	20250
	160	523	4629	1147	10151	2483	21976
50	80	484	4283	1223	10824	2418	21401
	100	611	5407	1274	11275	2678	23702
	120	688	6089	1404	12425	2678	23702
	160	688	6089	1534	13576	3185	28190
58	80	714	6319	1924	17027	3185	28190
	100	905	8009	2067	18293	4134	36589
	120	969	8576	2236	19789	4329	38315
	160	969	8576	2392	21169	4459	39465
65	80	969	8576	2743	24276	4836	42802
	100	1236	10939	2990	26462	6175	54653
	120	1236	10939	3263	28878	6175	54653
	160	1236	10939	3419	30258	6175	54653

Cross Roller Bearing Specification

Size \ Item	Basic Rated Load				Allowable Moment Load Mc		Moment Stiffness Km	
	Basic Dynamic Rated Load C		Basic Static Rated Load Co					
	x 10^2N	lb	x 10^2N	lb	Nm	In-lb	x 10^4Nm /rad	In-lb/arc-min
14	58	1304	86	1933	74	655	8.5	219
17	104	2338	163	3664	124	1097	15.1	389
20	146	3282	220	4946	187	1655	25.2	649
25	218	4901	358	8048	258	2283	39.2	1009
32	382	8587	654	14702	580	5133	100	2575
40	433	9734	816	18344	849	7514	179	4609
45	776	17444	1350	30348	1127	9974	257	6618
50	816	18344	1490	33495	1487	13160	351	9038
58	874	19648	1710	38441	2180	19293	531	13673
65	1300	29224	2230	50130	2740	24249	741	19081

"Basic dynamic rated load" is a constant stationary radial load that achieves a basic dynamic rated life of the bearing of one million revolutions.
"Basic static rated load" is a static load that achieves a contact stress of a constant level (408kN/mm2) at the center of a contact zone between the rolling element receiving a maximum load and track.

Dimensions (2UH)

Unit: mm

Symbol \ Size	14	17	20	25	32	40	45	50	58	65
øA	74	84	95	115	147	175	195	220	246	284
B	52.5	56.5	51.5	55.5	65.5	79	85	93	106	128
C	54	64	75	90	115	140	160	175	201	221

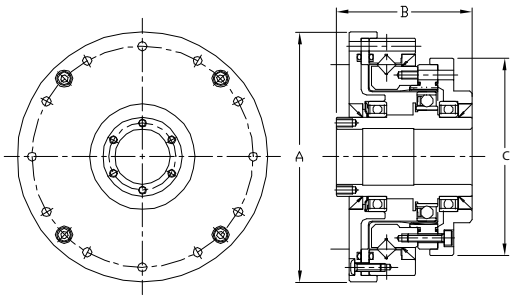

Lightweight, high torque gear unit with hollow shaft

SHG-2UH-LW Series

Incorporating a Harmonic Drive® gear component into an integral housing, the SHF-2UH-LW is a lightweight compact hollow shaft gearhead with zero backlash.

- Zero backlash
- 20% lighter than standard unit
- Large hollow through bore
- High positioning accuracy
- High torque capacity
- High torsional stiffness
- 30% increased torque compared to SHF Units

L_{10} Life: 10,000h

SHG-2UH-LW Series Ratings

Size \ Item	Ratio	Rated Torque at 2000rpm		Limit for Repeated Peak Torque		Limit for Momentary Torque	
		Nm	In-lb	Nm	In-lb	Nm	In-lb
14	50	7	62	23	204	46	407
	80	10	89	30	266	61	540
	100	10	89	36	319	70	620
17	50	21	186	44	389	91	805
	80	29	257	56	496	113	1,000
	100	31	274	70	620	143	1,266
	120	31	274	70	620	112	991
20	50	33	292	73	646	127	1,124
	80	44	389	96	850	165	1,460
	100	52	460	107	947	191	1,690
	120	52	460	113	1,000	191	1,690
	160	52	460	120	1,062	191	1,690
25	50	51	451	127	1,124	242	2,142
	80	82	726	178	1,575	332	2,938
	100	87	770	204	1,806	369	3,266
	120	87	770	217	1,921	395	3,496
	160	87	770	229	2,027	408	3,611
32	50	99	876	281	2,487	497	4,399
	80	153	1,354	395	3,496	738	6,532
	100	178	1,575	433	3,832	841	7,443
	120	178	1,575	459	4,062	892	7,895
	160	178	1,575	484	4,284	892	7,895

Size \ Item	Ratio	Rated Torque at 2000rpm		Limit for Repeated Peak Torque		Limit for Momentary Torque	
		Nm	In-lb	Nm	In-lb	Nm	In-lb
40	50	178	1,575	523	4,629	892	7,895
	80	268	2,372	675	5,974	1,270	11,240
	100	345	3,054	738	6,532	1,400	12,391
	120	382	3,381	802	7,098	1,530	13,542
	160	382	3,381	841	7,443	1,530	13,542
45	50	229	2,027	650	5,753	1,235	10,931
	80	407	3,602	918	8,125	1,651	14,613
	100	459	4,062	982	8,691	2,041	18,064
	120	523	4,629	1,070	9,470	2,288	20,250
	160	523	4,629	1,147	10,152	2,483	21,976
50	80	484	4,284	1,223	10,824	2,418	21,401
	100	611	5,408	1,274	11,276	2,678	23,702
	120	688	6,089	1,404	12,426	2,678	23,702
	160	688	6,089	1,534	13,577	3,185	28,190
58	80	714	6,319	1,924	17,029	3,185	28,190
	100	905	8,010	2,067	18,294	4,134	36,589
	120	969	8,576	2,236	19,790	4,329	38,315
	160	969	8,576	2,392	21,171	4,459	39,465
65	80	969	8,576	2,743	24,278	4,836	42,802
	100	1,236	10,940	2,990	26,464	6,175	54,653
	120	1,236	10,940	3,263	28,880	6,175	54,653
	160	1,236	10,940	3,419	30,261	6,175	54,653

Cross Roller Bearing Specification

Size \ Item	Basic Rated Load				Allowable Moment Load Mc		Moment Stiffness Km	
	Basic Dynamic Rated Load C		Basic Static Rated Load Co					
	x 10^2N	lb	x 10^2N	lb	Nm	In-lb	x 10^4Nm /rad	In-lb/arc-min
14	58	1,304	86	1,933	74	655	8.5	75
17	104	2,338	163	3,664	124	1,097	15.4	136
20	146	3,282	220	4,946	187	1,655	25.2	223
25	218	4,901	358	8,048	258	2,283	39.2	347
32	382	8,588	654	14,703	580	5,133	100	885
40	433	9,734	816	18,344	849	7,514	179	1,584
45	776	17,445	1,350	30,349	1,127	9,975	257	2,275
50	816	18,344	1,490	33,497	1,487	13,161	351	3,107
58	874	19,648	1,710	38,442	2,180	19,295	531	4,700
65	1,300	29,225	2,230	50,132	2,740	24,251	741	6,558

"Basic dynamic rated load" is a constant stationary radial load that achieves a basic dynamic rated life of the bearing of one million revolutions.
"Basic static rated load" is a static load that achieves a contact stress of a constant level (408kN/mm2) at the center of a contact zone between the rolling element receiving a maximum load and track.

Dimensions

Unit: mm

Symbol \ Size	14	17	20	25	32	40	45	50	58	65
øA	74	84	95	115	147	175	195	220	246	284
B	52.5	56.5	51.5	55.5	65.5	79	85	93	106	128
C	52	62	73	88	115	140	160	168	195	221

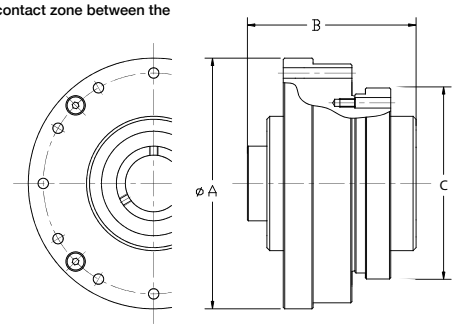

Lightweight, Hollow Shaft

SHD-2UH-LW Series

LW indicates lightweight. Axially compact, these gear units feature a large hollow input shaft and a robust cross roller bearing so loads can be mounted directly to the unit without the need for additional support bearings.

- Zero Backlash
- Ultra-flat design
- Large Hollow Input Shaft
- Accuracy <1 arc-min (most sizes)
- Rigid cross roller output bearing
- Lightweight

L_{10} Life: 7,000h

SHD-2UH-LW Series Ratings

Size	Ratio	Rated Torque at 2000rpm	Limit for Repeated Peak Torque	Limit for Average Torque	Limit for Momentary Peak Torque
		Nm	Nm	Nm	Nm
14	50	3.7	12	4.8	23
	80	5.4	16	7.7	35
	100	5.4	19	7.7	35
17	50	11	23	18	48
	80	15	29	19	61
	100	16	37	27	71
	120	16	37	27	71
20	50	17	39	24	69
	80	24	51	33	89
	100	28	57	34	95
	120	28	60	34	95
25	50	27	69	38	127
	80	44	96	60	179
	100	47	110	75	184
	120	47	117	75	204

Size	Ratio	Rated Torque at 2000rpm	Limit for Repeated Peak Torque	Limit for Average Torque	Limit for Momentary Peak Torque
		Nm	Nm	Nm	Nm
32	50	53	151	75	268
	80	83	213	117	398
	100	96	233	151	420
	120	96	247	151	445
40	50	96	281	137	480
	80	144	364	198	686
	100	185	398	260	700
	120	205	432	315	765

Cross Roller Bearing Specification

Size \ Item	Basic Rated Load				Allowable Moment Load Mc		Moment Stiffness Km	
	Basic Dynamic Rated Load C		Basic Static Rated Load Co					
	$x10^2$N	lb	$x10^2$N	lb	Nm	In-lb	$x10^4$Nm/rad	In-lb/arc.min
14	29	652	43	967	37	327	7.08	63
17	52	1,169	81	1,821	62	549	12.7	112
20	73	1,641	110	2,473	93	823	21	186
25	109	2,450	179	4,024	129	1,142	31	274
32	191	4,294	327	7,351	290	2,567	82.1	727
40	216	4,856	408	9,172	424	3,753	145	1,283

"Basic dynamic rated load" is a constant stationary radial load that achieves a basic dynamic rated life of the bearing of one million revolutions.
"Basic static rated load" is a static load that achieves a contact stress of a constant level (408kN/mm2) at the center of a contact zone between the rolling element receiving a maximum load and track.

Dimensions

Unit: mm

Symbol \ Size	14	17	20	25	32	40
øA	74	84	95	115	147	175
B	45.5	48	42	46.5	55	65

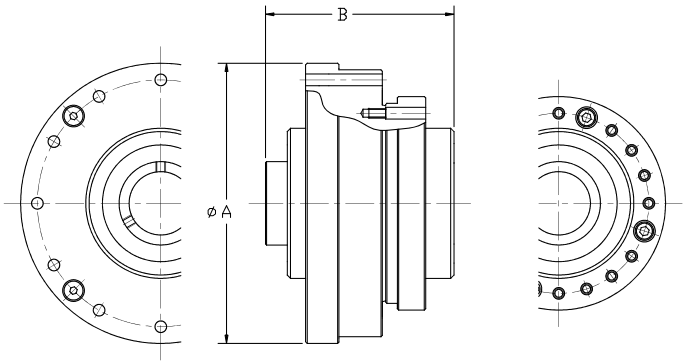

Hollow Shaft, Simplicity Unit

SHD-2SH Series

Axially compact, these gear units feature a large hollow input shaft and a robust cross roller bearing so loads can be mounted directly to the unit without the need for additional support bearings.

- Zero backlash
- Extremely flat profile
- Hollow through bore
- High positioning accuracy
- High stiffness cross roller bearing output
- High radial, axial, and moment load capacity

L_{10} Life: 7,000h

SHD-2SH Series Ratings

Size	Ratio	Rated Torque at 2000rpm	Limit for Repeated Peak Torque	Limit for Average Torque	Limit for Momentary Peak Torque
		Nm	Nm	Nm	Nm
14	50	3.7	12	4.8	23
	80	5.4	16	7.7	35
	100	5.4	19	7.7	35
17	50	11	23	18	48
	80	15	29	19	61
	100	16	37	27	71
	120	16	37	27	71
20	50	17	39	24	69
	80	24	51	33	89
	100	28	57	34	95
	120	28	60	34	95
25	50	27	69	38	127
	80	44	96	60	179
	100	47	110	75	184
	120	47	117	75	204

Size	Ratio	Rated Torque at 2000rpm	Limit for Repeated Peak Torque	Limit for Average Torque	Limit for Momentary Peak Torque
		Nm	Nm	Nm	Nm
32	50	53	151	75	268
	80	83	213	117	398
	100	96	233	151	420
	120	96	247	151	445
40	50	96	281	137	480
	80	144	364	198	686
	100	185	398	260	700
	120	205	432	315	765

Cross Roller Bearing Specification

Item / Size	Basic Rated Load				Allowable Moment Load Mc		Moment Stiffness Km	
	Basic Dynamic Rated Load C		Basic Static Rated Load Co		Nm	In-lb	$x10^4$ Nm/rad	In-lb /arc-min
	$x10^2$N	lb	$x10^2$N	lb				
14	29	652	43	967	37	327	7.08	182
17	52	1169	81	1821	62	549	12.7	327
20	73	1641	110	2473	93	823	21	541
25	109	2450	179	4024	129	1142	31	798
32	191	4294	327	7351	290	2567	82.1	2114
40	216	4856	408	9172	424	3752	145	3734

"Basic dynamic rated load" is a constant stationary radial load that achieves a basic dynamic rated life of the bearing of one million revolutions.
"Basic static rated load" is a static load that achieves a contact stress of a constant level (408kN/mm2) at the center of a contact zone between the rolling element receiving a maximum load and track.

Dimensions

Unit: mm

Symbol \ Size	14	17	20	25	32	40
øA	70	80	90	110	142	170
B	17.5	18.5	19	22	27.9	33

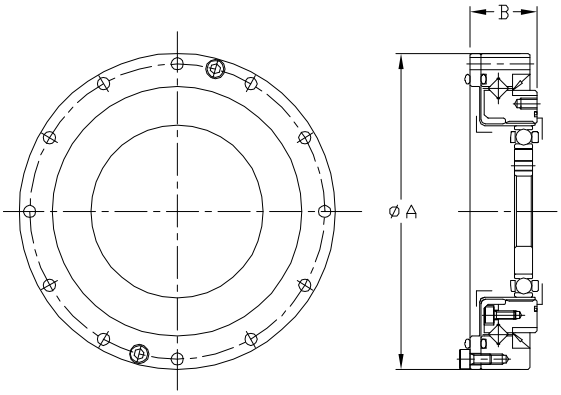

Simplicity gear unit

SHF-2SH/2SO Series

Simplicity Gear Units are Non-housed component gears combined with a precision cross roller output bearing. Simplicity Gear Units do not include the housing and output flange, which allows for even tighter integration into the customer's housing or machine structure.

- Zero backlash
- High positioning accuracy
- Compact and simple design
- High torque capacity
- High torsional stiffness

L_{10} Life: 7,000h

SHF Series Ratings

Size \ Item	Ratio	Rated Torque at 2000rpm		Limit for Repeated Peak Torque		Limit for Momentary Peak Torque	
		Nm	In-lb	Nm	In-lb	Nm	In-lb
14	30	4.0	35	9.0	80	17	150
	50	5.4	48	18	159	35	310
	80	7.8	69	23	204	47	416
	100	7.8	69	28	248	54	478
17	30	8.8	78	6	142	30	266
	50	16	142	34	301	70	620
	80	22	195	43	381	87	770
	100	24	212	54	478	110	974
	120	24	212	54	478	86	761
20	30	15	133	27	239	50	443
	50	25	221	56	496	98	867
	80	34	301	74	655	127	1124
	100	40	354	82	726	147	1301
	120	40	354	87	770	147	1301
	160	40	354	92	814	147	1301
25	30	27	239	50	443	95	841
	50	39	345	98	867	186	1646
	80	63	558	137	1212	255	2257
	100	67	593	157	1389	284	2514
	120	67	593	167	1478	304	2691
	160	67	593	176	1558	314	2779

Size \ Item	Ratio	Rated Torque at 2000rpm		Limit for Repeated Peak Torque		Limit for Momentary Peak Torque	
		Nm	In-lb	Nm	In-lb	Nm	In-lb
32	30	54	478	100	885	200	1770
	50	76	673	216	1912	382	3381
	80	118	1044	230	2036	568	5027
	100	137	1212	333	2947	647	5726
	120	137	1212	353	3124	686	6072
	160	137	1212	372	3292	686	6072
40	50	137	1212	402	3558	686	6072
	80	206	1823	519	4593	980	8674
	100	265	2345	568	5027	1080	9559
	120	294	2602	617	5460	1180	10444
	160	294	2602	647	5726	1180	10444
45	50	176	1558	500	4425	950	8408
	80	313	2770	706	6248	1270	11240
	100	353	3124	755	6682	1570	13896
	120	402	3558	823	7284	1760	15577
	160	402	3558	882	7806	1910	16905
50	50	245	2168	715	6328	1430	12657
	80	372	3292	941	8328	1860	16462
	100	470	4160	980	8673	2060	18233
	120	529	4682	1080	9558	2060	18233
	160	529	4682	1180	10443	2450	21684
58	50	353	3124	1020	9027	1960	17347
	80	549	4859	1480	13098	2450	21684
	100	686	6160	1590	14072	3180	28145
	120	745	6593	1720	15222	3330	29473
	160	745	6593	1840	16284	3430	30358

Cross Roller Bearing Specification

Size \ Item	Basic Rated Load				Allowable Moment Load Mc		Moment Stiffness Km	
	Basic Dynamic Rated Load C		Basic Static Rated Load Co					
	x 10^2N	lb	x 10^2N	lb	Nm	In-lb	x 10^4Nm /rad	In-lb/arc-min
14	58	1304	86	1933	74	655	8.5	219
17	104	2338	163	3664	124	1097	15.1	389
20	146	3282	220	4946	187	1655	25.2	649
25	218	4901	358	8048	258	2283	39.2	1009
32	382	8587	654	14702	580	5133	100	2575
40	433	9734	816	18344	849	7514	179	4609
45	776	17444	1350	30348	1127	9974	257	6618
50	816	18344	1490	33495	1487	13160	351	9038
58	874	19648	1710	38441	2180	19293	531	13673

- "Basic dynamic rated load" is a constant stationary radial load that achieves a basic dynamic rated life of the bearing of one million revolutions. "Basic static rated load" is a static load that achieves a contact stress of a constant level (408kN/mm2) at the center of a contact zone between the rolling element receiving a maximum load and track.

Dimensions (2SO)

Unit: mm

Symbol \ Size	14	17	20	25	32	40	45	50	58
øA	50	60	70	85	110	135	155	170	195
B	28.5	32.5	33.5	37	44	53	58	64	75.5

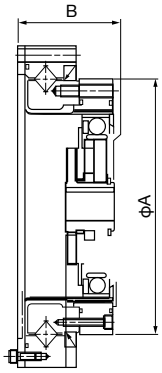

High torque simplicity gear unit

SHG-2SH/2SO Series

High Torque versions of our Simplicity Gear Units. Simplicity Gear Units do not include the housing and output flange, which allows for even tighter integration into the customer's housing or machine structure.

- Zero backlash
- High positioning accuracy
- High torque capacity
- High torsional stiffness
- 30% increased torque compared to SHF Units

L_{10} Life: 10,000h

SHG Series Ratings

Size \ Item	Ratio	Rated Torque at 2000rpm		Limit for Repeated Peak Torque		Limit for Momentary Peak Torque	
		Nm	In-lb	Nm	In-lb	Nm	In-lb
14	50	7.0	62	23	204	46	407
	80	10	89	30	266	61	540
	100	10	89	36	319	70	620
17	50	21	186	44	389	91	805
	80	29	257	56	496	113	1000
	100	31	274	70	620	143	1266
	120	31	274	70	620	112	991
20	50	33	292	73	646	127	1124
	80	44	389	96	850	165	1460
	100	52	460	107	947	191	1690
	120	52	460	113	1000	191	1690
	160	52	460	120	1062	191	1690
25	50	51	451	127	1124	242	2142
	80	82	726	178	1575	332	2938
	100	87	770	204	1805	369	3266
	120	87	770	217	1920	395	3496
	160	87	770	229	2027	408	3611
32	50	99	876	281	2487	497	4399
	80	153	1354	395	3496	738	6532
	100	178	1575	433	3832	841	7443
	120	178	1575	459	4062	892	7895
	160	178	1575	484	4283	892	7895

Size \ Item	Ratio	Rated Torque at 2000rpm		Limit for Repeated Peak Torque		Limit for Momentary Peak Torque	
		Nm	In-lb	Nm	In-lb	Nm	In-lb
40	50	178	1575	523	4629	892	7895
	80	268	2372	675	5974	1270	11240
	100	345	3053	738	6531	1400	12391
	120	382	3381	802	7098	1530	13542
	160	382	3381	841	7443	1530	13542
45	50	229	2027	650	5753	1235	10931
	80	407	3602	918	8124	1651	14613
	100	459	4062	982	8691	2041	18064
	120	523	4629	1070	9470	2288	20250
	160	523	4629	1147	10151	2483	21976
50	80	484	4283	1223	10824	2418	21401
	100	611	5407	1274	11275	2678	23702
	120	688	6089	1404	12425	2678	23702
	160	688	6089	1534	13576	3185	28190
58	80	714	6319	1924	17027	3185	28190
	100	905	8009	2067	18293	4134	36589
	120	969	8576	2236	19789	4329	38315
	160	969	8576	2392	21169	4459	39465
65	80	969	8576	2743	24276	4836	42802
	100	1236	10939	2990	26462	6175	54653
	120	1236	10939	3263	28878	6175	54653
	160	1236	10939	3419	30258	6175	54653

Cross Roller Bearing Specification

Size \ Item	Basic Rated Load				Allowable Moment Load Mc		Moment Stiffness Km	
	Basic Dynamic Rated Load C		Basic Static Rated Load Co					
	x 10^2N	lb	x 10^2N	lb	Nm	In-lb	x 10^4Nm /rad	In-lb/arc-min
14	58	1304	86	1933	74	655	8.5	219
17	104	2338	163	3664	124	1097	15.1	389
20	146	3282	220	4946	187	1655	25.2	649
25	218	4901	358	8048	258	2283	39.2	1009
32	382	8587	654	14702	580	5133	100	2575
40	433	9734	816	18344	849	7514	179	4609
45	776	17444	1350	30348	1127	9974	257	6618
50	816	18344	1490	33495	1487	13160	351	9038
58	874	19648	1710	38441	2180	19293	531	13673
65	1300	29224	2230	50130	2740	24249	741	19081

- "Basic dynamic rated load" is a constant stationary radial load that achieves a basic dynamic rated life of the bearing of one million revolutions. "Basic static rated load" is a static load that achieves a contact stress of a constant level (408kN/mm2) at the center of a contact zone between the rolling element receiving a maximum load and track.

Dimensions (2SH)

Unit: mm

Symbol \ Size	14	17	20	25	32	40	45	50	58	65
øA	50	60	70	85	110	135	155	175	195	215
B	52.5	56.5	51.5	55.5	65.5	79	85	93	106	128

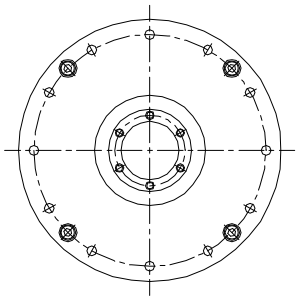

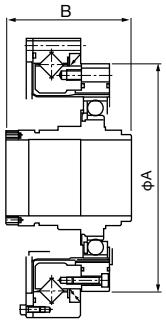

Phasing Differential

FD-2 Series Component

The FD series is an extremely compact differential unit that allows you to fine-tune the phase and timing during operation.

- Pancake
- Ultra compact differential unit
- Backlash is very small and unit requires no assembly adjustment

FD-2 Series Ratings

Size	Ratio	Rotational Speed rpm									
		3500 rpm		2850 rpm		1450 rpm		960 rpm		500 rpm	
		Nm	In-lb	Nm	In-lb	Nm	In-lb	Nm	In-lb	Nm	In-lb
20	80	29	257	30	266	30	266	30	266	30	266
	100	30	266	31	274	36	319	36	319	36	319
	128	31	274	34	301	43	381	43	381	43	381
	160	32	283	35	310	45	398	49	434	49	434
25	80	46	407	50	443	57	504	57	504	57	504
	100	49	434	53	469	67	593	79	699	79	699
	120	52	460	55	487	70	620	82	726	96	850
	160	54	478	57	504	73	646	83	735	108	956
	200	55	487	59	522	74	655	84	743	108	956
32	78	98	867	108	956	108	656	108	956	108	956
	100	108	956	118	1044	147	1301	157	1389	157	1389
	131	108	956	118	1044	157	1389	176	1558	206	1823
	157	108	956	118	1044	157	1389	176	1558	216	1912
	200	108	956	118	1044	157	1389	176	1558	216	1912
	260	108	956	118	1044	157	1389	176	1558	216	1912
40	80	196	1735	196	1735	196	1735	196	1735	196	1735
	100	235	2080	245	2168	265	2345	265	2345	265	2345
	128	235	2080	245	2168	314	2779	363	3213	372	3292
	160	235	2080	245	2168	314	2779	363	3213	451	3991
	200	235	2080	245	2168	314	2779	363	3213	451	3991
	258	235	2080	245	2168	314	2779	363	3213	451	3991
50	80	353	3124	353	3124	353	3124	353	3124	353	3124
	100	441	3903	470	4160	559	4947	559	4947	559	4947
	120	441	3903	470	4160	588	5204	666	5894	666	5894
	160	441	3903	470	4160	588	5204	676	5983	843	7461
	200	441	3903	470	4160	588	5204	676	5983	843	7461
	242	441	3903	470	4160	588	5204	676	5983	843	7461
65	78	-	-	-	-	764	6761	764	6761	764	6761
	104	-	-	-	-	1100	9735	1190	10532	1190	10532
	132	-	-	-	-	1100	9735	1250	11063	1570	13895
	158	-	-	-	-	1100	9735	1250	11063	1570	13895
	208	-	-	-	-	1100	9735	1250	11063	1570	13895
	260	-	-	-	-	1100	9735	1250	11063	1570	13895
80	80	-	-	-	-	1370	12125	1370	12125	1370	12125
	96	-	-	-	-	1800	15930	1800	15930	1800	15930
	128	-	-	-	-	2180	19293	2490	22037	2710	23984
	160	-	-	-	-	2180	19293	2490	22037	3130	27701
	194	-	-	-	-	2180	19293	2490	22037	3130	27701
	258	-	-	-	-	2180	19293	2490	22037	3130	27701
	320	-	-	-	-	2180	19293	2490	22037	3130	27701
100	80	-	-	-	-	2470	21860	2470	21860	2470	21860
	100	-	-	-	-	3720	32922	3720	32922	3720	32922
	120	-	-	-	-	3980	35223	4560	40356	4740	41949
	160	-	-	-	-	3980	35223	4560	40356	5720	50622
	200	-	-	-	-	3980	35223	4560	40356	5720	50622
	242	-	-	-	-	3980	35223	4560	40356	5720	50622
	320	-	-	-	-	3980	35223	4560	40356	5720	50622

Dimensions

Unit: mm

Symbol \ Size	20	25	32	40	50	65	80	100
øA	70	85	110	135	170	215	265	330
B	25	29	37	43	53	71	83	101

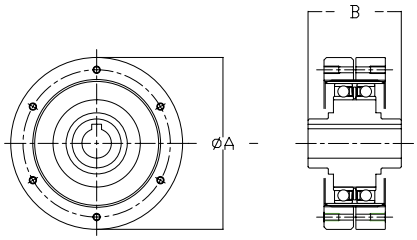

FD-0 Series Unit Type

The FD series is a compact differential unit that allows you to fine-tune the phase and timing during operation. The unit type is provided with the housing so additional gears or pulleys required for the machine can be directly mounted onto it.

- Pancake
- Compact differential unit
- Backlash is very small and unit requires no assembly adjustment

FD-0 Series Ratings

Size	Ratio	Rotational Speed rpm									
		3500 rpm		2850 rpm		1450 rpm		960 rpm		500 rpm	
		Nm	In-lb	Nm	In-lb	Nm	In-lb	Nm	In-lb	Nm	In-lb
20	80	29	257	30	266	30	266	30	266	30	266
	100	30	266	31	274	36	319	36	319	36	319
	128	31	274	34	301	43	381	43	381	43	381
	160	32	283	35	310	45	398	49	434	49	434
25	80	46	407	50	443	57	504	57	504	57	504
	100	49	434	53	469	67	593	79	699	79	699
	120	52	460	55	487	70	620	82	726	96	850
	160	54	478	57	504	73	646	83	735	108	956
	200	55	487	59	522	74	655	84	743	108	956
32	78	98	867	108	956	108	656	108	956	108	956
	100	108	956	118	1044	147	1301	157	1389	157	1389
	131	108	956	118	1044	157	1389	176	1558	206	1823
	157	108	956	118	1044	157	1389	176	1558	216	1912
	200	108	956	118	1044	157	1389	176	1558	216	1912
	260	108	956	118	1044	157	1389	176	1558	216	1912
40	80	196	1735	196	1735	196	1735	196	1735	196	1735
	100	235	2080	245	2168	265	2345	265	2345	265	2345
	128	235	2080	245	2168	314	2779	363	3213	372	3292
	160	235	2080	245	2168	314	2779	363	3213	451	3991
	200	235	2080	245	2168	314	2779	363	3213	451	3991
	258	235	2080	245	2168	314	2779	363	3213	451	3991
50	80	353	3124	353	3124	353	3124	353	3124	353	3124
	100	441	3903	470	4160	559	4947	559	4947	559	4947
	120	441	3903	470	4160	588	5204	666	5894	666	5894
	160	441	3903	470	4160	588	5204	676	5983	843	7461
	200	441	3903	470	4160	588	5204	676	5983	843	7461
	242	441	3903	470	4160	588	5204	676	5983	843	7461
65	78	-	-	-	-	764	6761	764	6761	764	6761
	104	-	-	-	-	1100	9735	1190	10532	1190	10532
	132	-	-	-	-	1100	9735	1250	11063	1570	13895
	158	-	-	-	-	1100	9735	1250	11063	1570	13895
	208	-	-	-	-	1100	9735	1250	11063	1570	13895
	260	-	-	-	-	1100	9735	1250	11063	1570	13895
80	80	-	-	-	-	1370	12125	1370	12125	1370	12125
	96	-	-	-	-	1800	15930	1800	15930	1800	15930
	128	-	-	-	-	2180	19293	2490	22037	2710	23984
	160	-	-	-	-	2180	19293	2490	22037	3130	27701
	194	-	-	-	-	2180	19293	2490	22037	3130	27701
	258	-	-	-	-	2180	19293	2490	22037	3130	27701
	320	-	-	-	-	2180	19293	2490	22037	3130	27701
100	80	-	-	-	-	2470	21860	2470	21860	2470	21860
	100	-	-	-	-	3720	32922	3720	32922	3720	32922
	120	-	-	-	-	3980	35223	4560	40356	4740	41949
	160	-	-	-	-	3980	35223	4560	40356	5720	50622
	200	-	-	-	-	3980	35223	4560	40356	5720	50622
	242	-	-	-	-	3980	35223	4560	40356	5720	50622
	320	-	-	-	-	3980	35223	4560	40356	5720	50622

Dimensions

Unit: mm

Symbol \ Size	20	25	32	40	50	65	80	100
øA	85	95	120	145	185	235	290	360
B	73	81	95	113	132	147	178	212

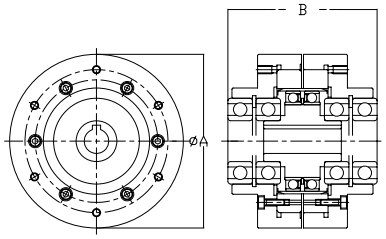

Phasing Differential

FBB Series

The FBB was developed as a versatile simple differential drive transmission for direct phasing of rotating elements while they are in motion. Offsetting internal gear ratios deliver a through ratio of 1:1 and trim adjustments can be applied through one or both of two wave generators.

- 1:1 phasing differential between input and output
- High ratio trim adjustment
- Compact, low backlash design for end roll mounting

FBB Series Ratings

Size	Ratio	Maximum Input Speed rpm		Rated Torque @1750 rpm	Maximum Output Torque	No Load Starting Torque	Input Inertia
		Oil	Grease	Nm	Nm	Ncm	kgcm²
20	80	6000	3500	28	28	3.2	0.14
	100			28	34	3.2	0.14
	120			28	40	3.2	0.14
	160			28	44	3.2	0.14
25	80	5000	3500	46	48	4.2	0.36
	100			46	68	4.2	0.36
	120			46	79	4.2	0.36
	160			46	88	4.2	0.36
32	80	4500	3500	92	107	5.7	1.32
	100			92	136	5.7	1.32
	120			92	158	5.7	1.32
	160			92	175	5.7	1.32
40	80	4000	3000	193	192	19.1	3.42
	100			193	271	19.1	3.42
	120			193	305	19.1	3.42
	160			193	350	19.1	3.42
50	80	3500	2500	359	350	35.3	9.91
	100			359	475	35.3	9.91
	120			359	588	35.3	9.91
	160			359	655	35.3	9.91

Dimensions

Unit: mm

Symbol \ Size	20	25	32	40	50
ø A	70	85	110	134	170
B	26.5	34.8	42	56.5	-

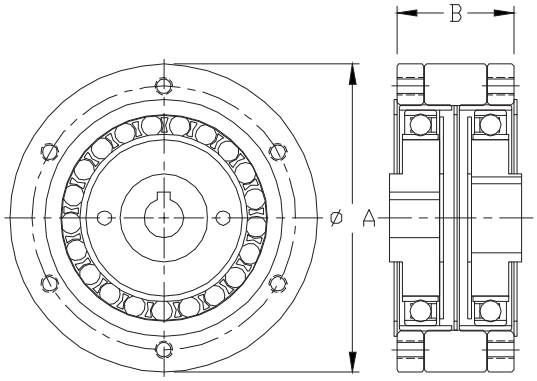

HDI Infinit-Indexer® Phase Adjuster

Infinit-Indexer® phase adjusters are available from stock in the standard bore sizes shown with keyways, set screws, and tapped holes for face mounting of either hub. It is possible for the user to modify these configurations by disassembling the unit. The hub material is low carbon steel with suitable sizes shown in notes to the dimensional drawings. Additional sizes and configurations are available by special order.

- Fine tune rotational position of shafts and machine parts
- Phase cams
- Adjust roll registration
- Take up backlash in spur and worm gears
- Synchronize indexing devices

3 Models, 6 Bore Sizes Available From Stock

HDI Size	Bore Size	O.D.	Length	Torque Capacity
-10	1/2" 5/8" 3/4"	2 3/8" (60.33mm)	1 11/16" (42.9mm)	1000 lb-in (113 Nm)
-25	3/4" 1"	3" (76.2mm)	2 3/16" (76.2mm)	2500 lb-in (283 Nm)
-50	1 1/4"	3 3/4" (95.3mm)	2 3/8" (95.3mm)	5000 lb-in (565 Nm)

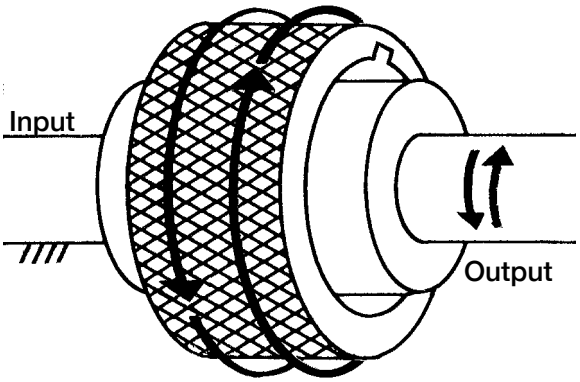

To operate, hand rotate the adjusting ring in either direction to produce a 100:1 reduction between the ring and the output. Adjust the friction adjustment/locking screw to desired resistance. For some applications, one adjustment will be sufficient for both shaft turning and phase adjusting modes. For more severe loading, such as hard stops or high peak torque situations, the friction adjustment/locking screw may be used to lock the adjusting ring in place to maintain phase.

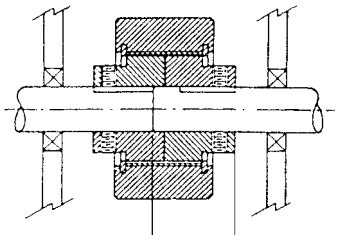

IN-LINE SHAFT

Flexible Couplings

HDI Size	L DIM
-10	1.09
-25	1.34
-50	1.43

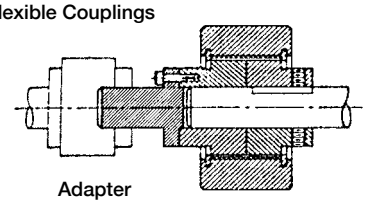

IN-LINE SHAFT

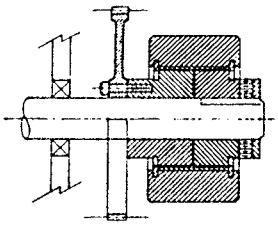

CONCENTRIC SHAFT

Dimensions

Unit: inch

Size	10	10	10	25	25	50
øA	2.38	2.38	2.38	3.00	3.00	3.75
B	1.69	1.69	1.69	2.19	2.19	2.37
øC	0.500	0.625	0.750	0.750	1.000	1.250
D	1.38	1.38	1.38	1.75	1.75	2.17

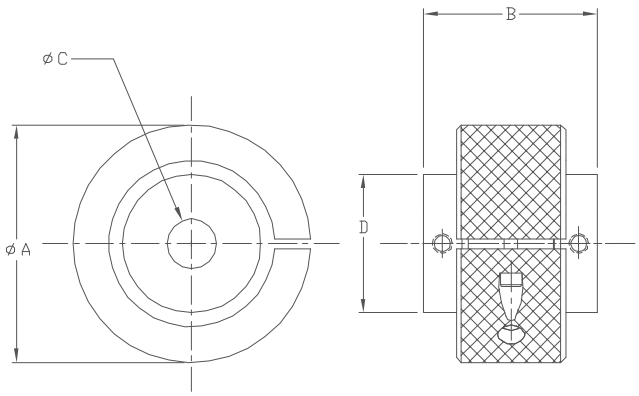

Quick Connect® Gearhead for Servomotors

CSF-GH Series

CSF-GH Quick Connect® gearheads with zero-backlash Harmonic Drive® gearing are available with high reduction ratios, 50:1 to 160:1. CSF-GH utilizes our proprietary S tooth profile and provides high precision positioning (repeatability ±4 to ±10 arc-sec).

- Zero Backlash
- Available in 5 Sizes
- Peak torque 18Nm ~ 2630Nm
- Ratios, 50:1 to 160:1
- Accuracy <1 arc-min
- High Efficiency
- High load capacity output bearing
- Motor size range 30W to 5,000W

L_{10} Life: 7,000h

CSF-GH Series Ratings

Size \ Item	Ratio	Rated Torque at 2000rpm		Limit for Repeated Peak Torque		Limit for Momentary Peak Torque	
		Nm	In-lb	Nm	In-lb	Nm	In-lb
14	50	5.4	48	18	159	35	310
	80	7.8	69	23	204	47	416
	100	7.8	69	28	248	54	478
20	50	25	221	56	496	98	867
	80	34	301	74	655	127	1124
	100	40	354	82	726	147	1301
	120	40	354	87	770	147	1301
	160	40	354	92	814	147	1301
32	50	76	673	216	1912	382	3381
	80	118	1044	304	2690	568	5027
	100	137	1212	333	2947	647	5726
	120	137	1212	353	3124	686	6071
	160	137	1212	372	3292	686	6071
45	50	176	1558	500	4425	950	8408
	80	313	2770	706	6248	1270	11240
	100	353	3124	755	6682	1570	13895
	120	402	3558	823	7284	1760	15576
	160	402	3558	882	7806	1910	16904
65	80	745	6593	2110	18674	3720	32922
	100	951	8416	2300	20355	4750	42038
	120	951	8416	2510	22214	4750	42038
	160	951	8416	2630	23276	4750	42038

Cross Roller Bearing Specification

Size \ Item	Basic Rated Load				Allowable Moment Load Mc		Moment Stiffness Km	
	Basic Dynamic Rated Load C		Basic Static Rated Load Co					
	N	lb	N	lb	Nm	In-lb	$\times 10^4$ Nm/rad	In-lb/ arc.min
14	5110	1149	7060	1587	27	239	3.0	77
20	10600	2383	17300	3889	145	1283	17	438
32	20500	4608	32800	7373	258	2283	42	1082
45	41600	9352	76000	17085	797	7054	100	2575
65	81600	18344	149000	33495	2156	19082	323	8317

- "Basic dynamic rated load" is a constant stationary radial load that achieves a basic dynamic rated life of the bearing of one million revolutions. "Basic static rated load"is a static load that achieves a contact stress of a constant level (4kN/mm²) at the center of a contact zone between the rolling element receiving a maximum load and track.

Dimensions

Unit: mm

Symbol \ Size	14	20	32	45	65
A	60	90	120	170	230
B	21	27	35	53	57
C (ref.)	55	72	105.5	128	157
D	37	53	98	103	135
øE	16	25	40	50	70

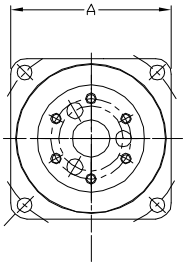

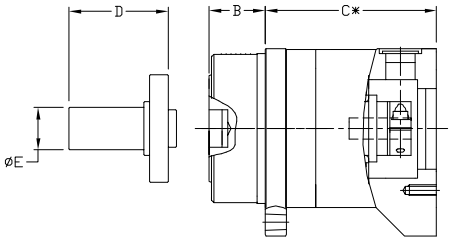

* The length and shape of the motor adapter flange will depend upon the specific motor that is selected for use with the gearhead. Please contact Harmonic Drive LLC for a detailed drawing.

CSG-GH Series

CSG-GH high-torque Quick Connect® gearheads with zero backlash Harmonic Drive® gearing are available with high reduction ratios, 50:1 to 160:1.

- Zero Backlash
- Available in 5 Sizes
- Peak torque 23Nm ~ 3419Nm
- Ratios, 50:1 to 160:1
- Accuracy <1 arc-min
- High Efficiency
- High load capacity output bearing
- Motor size range 30W to 5,000W
- 30% higher rated torque, repeated peak torque & maximum momentary torque than CSF series products of the same size

L_{10} Life: 10,000h

CSG-GH Series Ratings

Item / Size	Ratio	Rated Torque at 2000rpm		Limit for Repeated Peak Torque		Limit for Momentary Peak Torque	
		Nm	In-lb	Nm	In-lb	Nm	In-lb
14	50	7.0	62	23	204	46	407
	80	10	89	30	266	61	540
	100	10	89	36	319	70	620
20	50	33	292	73	646	127	1124
	80	44	389	96	850	165	1460
	100	52	460	107	947	191	1690
	120	52	460	113	1000	191	1690
	160	52	460	120	1062	191	1690
32	50	99	876	281	2487	497	4399
	80	153	1354	395	3496	738	6532
	100	178	1575	433	3832	812	7187
	120	178	1575	459	4062	812	7187
	160	178	1575	484	4284	812	7187
45	50	229	2027	650	5753	1235	10931
	80	407	3602	918	8125	1651	14613
	100	459	4062	982	8691	2033	17994
	120	523	4629	1070	9470	2033	17994
	160	523	4629	1147	10152	2033	17994
65	80	969	8576	2743	24278	4836	42802
	100	1236	10940	2990	26464	5174	45794
	120	1236	10940	3263	28880	5174	45794
	160	1236	10940	3419	30261	5174	45794

Cross Roller Bearing Specification

Item / Size	Basic Rated Load				Allowable Moment Load Mc		Moment Stiffness Km	
	Basic Dynamic Rated Load C		Basic Static Rated Load Co					
	N	lb	N	lb	Nm	In-lb	$\times 10^4$ Nm/rad	In-lb/ arc.min
14	5110	1149	7060	1587	27	239	3.0	77
20	10600	2383	17300	3889	145	1283	17	438
32	20500	4608	32800	7373	258	2283	42	1082
45	41600	9352	76000	17085	797	7054	100	2575
65	81600	18344	149000	33495	2156	19082	323	8317

- "Basic dynamic rated load" is a constant stationary radial load that achieves a basic dynamic rated life of the bearing of one million revolutions. "Basic static rated load"is a static load that achieves a contact stress of a constant level (4kN/mm²) at the center of a contact zone between the rolling element receiving a maximum load and track.

Dimensions

Unit: mm

Symbol \ Size	14	20	32	45	65
A	60	90	120	170	230
B	21	27	35	53	57
C (ref.)	55	72	105.5	128	157
D	37	53	98	103	135
øE	16	25	40	50	70

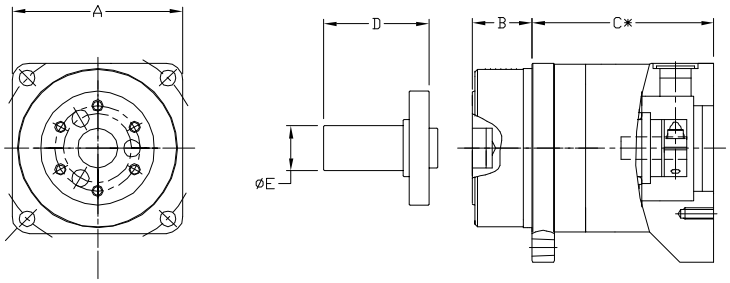

* The length and shape of the motor adapter flange will depend upon the specific motor that is selected for use with the gearhead. Please contact Harmonic Drive LLC for a detailed drawing.

Harmonic Planetary® Gearhead
Quick Connect® Coupling

HPG Series

Quick Connect® gearhead for high performance servo motors. Reduction ratios 3:1 to 50:1. Available with flange output, straight shaft (without key), straight shaft (with key) and center tapped hole.

- Low backlash: Less than 3 arc-min (less than 1 arc-min optional)
- Ratios: 3:1 to 50:1
- Quick Connect® coupling
- Peak torque: 5Nm ~ 3200Nm
- High moment capacity cross roller output bearing
- High efficiency
- Sealed structure
- Motor size range 10W to 15kW

L_{10} Life: 20,000h

HPG Series Ratings

Size	Ratio	Rated Torque at 3000 rpm		Limit for Repeated Peak Torque		Limit for Momentary Peak Torque	
		Nm	In-lb	Nm	In-lb	Nm	In-lb
11	5	2.5	22	7.8	69	20	177
	9	2.5	22	3.9	35	20	177
	21	3.4	30	9.8	87	20	177
	37	3.4	30	9.8	87	20	177
	45	3.4	30	9.8	87	20	177
14	3	2.9	26	15	133	37	327
	5	5.9	52	23	204	56	496
	11	7.8	69	23	204	56	496
	15	9.0	80	23	204	56	496
	21	9	78	23	204	56	496
	33	10	89	23	204	56	496
	45	10	89	23	204	56	496
20	3	8.8	78	64	566	124	1097
	5	16	142	100	885	217	1920
	11	20	177	100	885	217	1920
	15	24	212	100	885	217	1920
	21	25	221	100	885	217	1920
	33	29	257	100	885	217	1920
	45	29	257	100	885	217	1920

Size	Ratio	Rated Torque at 3000 rpm		Limit for Repeated Peak Torque		Limit for Momentary Peak Torque	
		Nm	In-lb	Nm	In-lb	Nm	In-lb
32	3	31	274	225	1991	507	4487
	5	66	584	300	2655	650	5753
	11	88	779	300	2655	650	5753
	15	92	814	300	2655	650	5753
	21	98	867	300	2655	650	5753
	33	108	956	300	2655	650	5753
	45	108	956	300	2655	650	5753
50	3	97	858	657	5814	1850	16373
	5	170	1505	850	7523	1850	16373
	11	200	1770	850	7523	1850	16373
	15	230	2036	850	7523	1850	16373
	21	260	2301	850	7523	1850	16373
	33	270	2390	850	7523	1850	16373
	45	270	2390	850	7523	1850	16373
65	4	500	4425	2200	19470	4500	39825
	5	530	4691	2200	19470	4500	39825
	12	600	5310	2200	19470	4500	39825
	15	730	6461	2200	19470	4500	39825
	20	800	7080	2200	19470	4500	39825
	25	850	7523	2200	19470	4500	39825
	40	640	5664	1900	16816	4500	39825
	50	750	6638	2200	19472	4500	39825

Cross Roller Bearing Specification

Item / Size	Basic Rated Load				Allowable Moment Load MC		Moment Stiffness Km	
	Basic Dynamic Rated Load C		Basic Static Rated Load Co		Nm	In-lb	$x10^4$ Nm/rad	In-lb/ arc-min
	N	lb	N	lb				
11	3116	700	4087	919	9.50	84	0.88	23
14	5110	1149	7060	1587	32.3	286	3.0	77
20	10600	2383	17300	3889	183	1620	16.8	433
32	20600	4631	32800	7373	452	4000	42.1	1084
50	41600	9352	76000	17085	1076	9523	100	2575
65	90600	20367	14800	33270	3900	34515	364	9373

Dimensions

Unit: mm

Symbol \ Size	11	14	20	32	50	65
A	40	60	90	120	170	230
B	15	21	27	35	53	57
C (ref.)	30.5	64	71	104	123	184.5
D	27	37	53	98	103	-
øE	10	16	25	40	50	-

* The length and shape of the motor adapter flange will depend upon the specific motor that is selected for use with the gearhead. Please contact Harmonic Drive LLC for a detailed drawing.

--- Size 65—Shaft is available as special request. ---

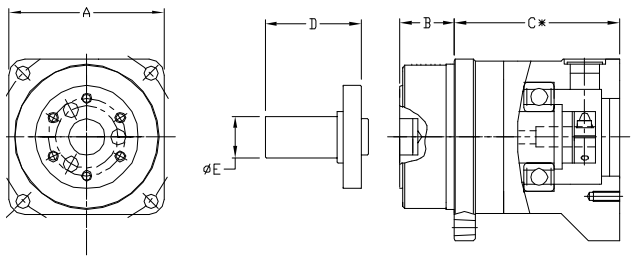

HPG Helical Series

Quick Connect® gearhead for high performance servo motors. Reduction ratios 3:1 to 10:1. Available with flange output, straight shaft (without key), straight shaft (with key) and center tapped hole.

- Helical Gearing
- Available in four Frame Sizes
- Peak Torque: 5Nm to 400Nm
- Ratios: 3,4,5,6,7,8,9 and 10:1
- High Efficiency
- Backlash <3 arc-min (<1arc-min available as an option)
- Repeatability ±20 arc-sec
- High load capacity Cross Roller output bearing
- Quick Connect® coupling for easy mounting of any motor

L_{10} Life: 20,000h

HPG Helical Series Ratings

Size	Ratio	Rated Torque at 3000 rpm		Limit for Repeated Peak Torque		Limit for Momentary Peak Torque	
		Nm	In-lb	Nm	In-lb	Nm	In-lb
11	4	2.8	25	10	89	20	177
	5	2.9	26	10	89	20	177
	6	2.9	26	10	89	20	177
	7	3.1	27	9	80	20	177
	8	3.1	27	7	62	20	177
	9	3.1	27	6	53	20	177
	10	3.4	30	5	44	20	177
14	3	4.0	35	20	177	37	327
	4	7.0	62	30	266	56	496
	5	7.2	64	30	266	56	496
	6	7.3	65	30	266	56	496
	7	7.8	69	26	266	56	496
	8	7.8	69	20	177	56	496
	9	7.9	70	17	150	56	496
	10	8.5	75	15	133	56	496

Size	Ratio	Rated Torque at 3000 rpm		Limit for Repeated Peak Torque		Limit for Momentary Peak Torque	
		Nm	In-lb	Nm	In-lb	Nm	In-lb
20	3	11	97	90	797	124	1097
	4	23	203	133	1177	217	1921
	5	23	203	133	1177	217	1921
	6	23	203	126	1115	217	1921
	7	25	221	108	956	217	1921
	8	25	221	84	743	217	1921
	9	25	221	73	646	217	1921
	10	27	239	65	575	217	1921
32	3	50	443	290	2567	507	4487
	4	77	682	400	3540	650	5753
	5	80	708	400	3540	650	5753
	6	80	708	390	3452	650	5753
	7	85	867	330	2921	650	5753
	8	85	752	260	2301	650	5753
	9	86	752	220	1947	650	5753
	10	92	814	200	1770	650	5753

Cross Roller Bearing Specification

Item / Size	Basic Rated Load				Allowable Moment Load MC		Moment Stiffness Km	
	Basic Dynamic Rated Load C		Basic Static Rated Load Co		Nm	In-lb	x10⁴ Nm/rad	In-lb/ arc-min
	N	lb	N	lb				
11	3116	700	4087	919	9.50	84	0.88	23
14	5110	1149	7060	1587	32.3	286	3.0	77
20	10600	2383	17300	3889	183	1620	16.8	433
32	20600	4631	32800	7373	452	4000	42.1	1084

Dimensions

Unit: mm

Symbol \ Size	11	14	20	32
A	40	60	90	120
B	15	21	27	35
C (ref.)	30.5	64	71	104
D	27	37	53	98
øE	10	16	25	40

* The length and shape of the motor adapter flange will depend upon the specific motor that is selected for use with the gearhead. Please contact Harmonic Drive LLC for a detailed drawing.

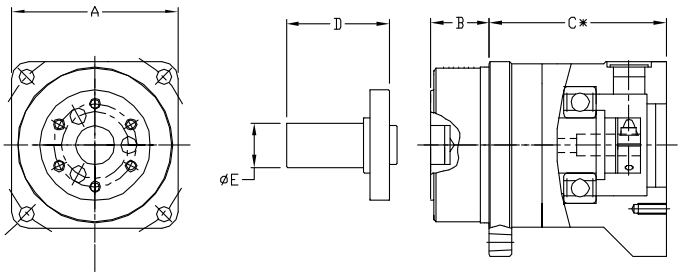

Harmonic Planetary® Gearhead
Quick Connect® Coupling

HPGP Series

High torque Quick Connect® gearhead for high performance servo motors. Reduction ratios 4:1 to 45:1. Available with flange output, Straight shaft (without key), Straight shaft (with key) and center tapped hole.

- Peak torque 12Nm ~ 3940Nm
- High precision
- Backlash <1 arc-min is available (size #14-65) (Standard backlash specification is < 3 arc-min)
- Cross roller bearing for high load capacity and moment stiffness
- Quick Connect® coupling
- Ratios, Single Stage: 4:1 to 5:1, Two Stage: 11:1 to 45:1
- Motor size range 10W to 15kW

L_{10} Life: 20,000h

HPGP Series Ratings

Size \ Item	Ratio	Rated Torque at 2000rpm	Limit for Repeated Peak Torque	Limit for Momentary Peak Torque
		Nm	Nm	Nm
11	5	3.4	12	20
	21	4.6	13	
	37			
	45			
14	5	7.8	39	56
	11	10	38	63
	15	12	39	
	21	12		
	33	13		
	45	13		
20	5	21	133	217
	11	26	156	
	15	32	142	
	21	33		
	33	39	156	
	45	39	142	

Size \ Item	Ratio	Rated Torque at 2000rpm	Limit for Repeated Peak Torque	Limit for Momentary Peak Torque
		Nm	Nm	Nm
32	5	87	400	400
	11	104	440	650
	15	122	400	
	21	130	400	
	33	143	440	
	45	143	400	
50	5	226	1460	1850
	11	266	1460	2180
	15	306	1500	
	21	346	1460	
	33	359	1460	
	45	359	1360	
65	4	665	3520	4500
	5	705	3790	
	12	798	3790	
	15	971	3940	
	20	1060	3790	
	25	1130	3840	

Cross Roller Bearing Specification

Size \ Item	Basic Rated Load				Allowable Moment Load MC		Moment Stiffness Km	
	Basic Dynamic Rated Load C		Basic Static Rated Load Co		Nm	In-lb	x10⁴ Nm/rad	In-lb/ arc-min
	N	lb	N	lb				
11	3116	700	4087	919	9.50	84	0.88	23
14	5110	1149	7060	1587	32.3	286	3.0	77
20	10600	2383	17300	3889	183	1620	16.8	433
32	20600	4631	32800	7373	452	4000	42.1	1084
50	41600	9352	76000	17085	1076	9523	100	2575
65	90600	20367	148000	33270	3900	34515	364	9373

Dimensions

Unit: mm

Symbol \ Size	11	14	20	32	50	65
A	40	60	90	120	170	230
B	15	21	27	35	53	57
C (ref.)	30.5	64	71	104	123	184.5
D	27	37	53	98	103	-
øE	10	16	25	40	50	-

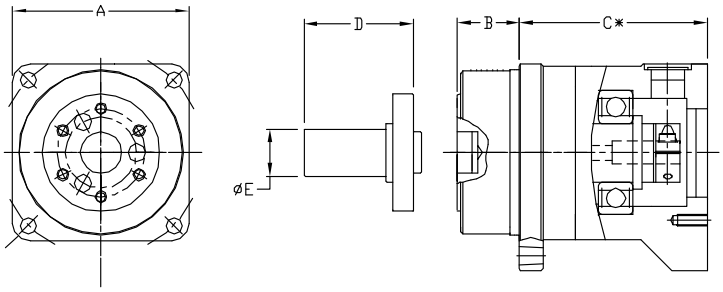

* The length and shape of the motor adapter flange will depend upon the specific motor that is selected for use with the gearhead. Please contact Harmonic Drive LLC for a detailed drawing.

---- Size 65—Shaft is available as special request. ---

Right Angle Harmonic Planetary® Gearhead
Quick Connect® Coupling

HPG RA Series

Right angle, high precision, Harmonic Planetary® gearhead with low backlash.

- High precision Planetary gearhead
- Low backlash: Less than 3 arc-min (less than 1 arc-min optional)
- Quick Connect® coupling
- High torque capacity
- High moment capacity cross roller output bearing
- Right angle configuration allows for use in limited space

L_{10} Life: 20,000h

HPG RA Series Ratings

Size	Model	Ratio	Rated Torque	Limit for Average Load Torque*1	Limit for Repeated Peak Torque*2	Limit for Momentary Peak Torque*3
			Nm	Nm	Nm	Nm
32	RA3	5	66	150	150	200
		11	88	170	330	440
		15	92	170	300	600
		21	98	170	300	650
		33	108	200	330	650
		45	108	200	300	650
50	RA3	5	150	150	150	200
		11	170	330	330	440
		15	200	450	450	600
		21	200	500	630	840
		33	230	500	990	1320
		45	230	500	1140	1800

Size	Model	Ratio	Rated Torque	Limit for Average Load Torque*1	Limit for Repeated Peak Torque*22	Limit for Momentary Peak Torque*3
			Nm	Nm	Nm	Nm
50	RA5	5	260	340	400	500
		12	260	400	880	1100
		15	270	450	1200	1500
		21	270	500	1150	2100
		33	270	500	1140	2180
		45	270	500	1140	2180
65	RA5	5	400	400	400	500
		12	600	960	960	1200
		15	730	1200	1200	1500
		20	800	1500	1600	2000
		25	850	1500	2000	2500
		40	640	1300	1900	4000
		50	750	1500	2200	4500

*1: Average load torque calculated based on the application motion profile must not exceed values shown in the table.
*2: The limit for torque during start and stop cycles. Always operate below this value.
*3: The limit for torque during emergency stops or from external shock loads.

Cross Roller Bearing Specification

Item / Size	Basic Rated Load				Allowable Moment Load MC		Moment Stiffness Km	
	Basic Dynamic Rated Load C		Basic Static Rated Load Co		Nm	In-lb	x10⁴ Nm/rad	In-lb/ arc-min
	N	lb	N	lb				
32	20500	4608	32800	7373	452	4000	42.1	1084
50	41600	9352	76000	17085	1076	9523	100	2575
65	90600	20367	148000	33270	3900	34515	364	9373

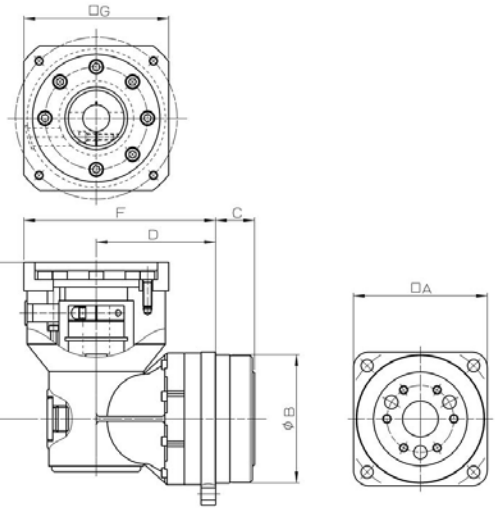

Dimensions

Unit: mm

Size	A	øB	C	D	E*	F	G
32	120	115h7	35	107	140/175	175/197/217	130/180/220
50	170	165h8	53	144	168/200	209/234/254	130/180/220
65	230	220h8	57	226	168/200	291/316/336	130/180/220

* Left side description: The limited length of the Motor shaft is 81mm. Right side description: The limited length of the Motor shaft is 116mm.
Note: Dimensions F & G depend on the chosen Motor flange square size. Contact Harmonic Drive LLC for special flange motor combination.

Harmonic Planetary® Gearhead
Quick Connect® Coupling

HPN-A Series

HPN value series planetary gearheads feature a robust design utilizing helical gears for quiet performance and long life. These gearheads are available with short lead times and are designed to couple to any servo motor with our Quick Connect® coupling system.

- Peak torque 9Nm to 752Nm
- Compact design
- High precision
- Backlash <5 arc-min (One-stage) , < 7 arc-min (Two-stage)
- Quick Connect® coupling system
- Reduction ratios between 3:1 and 50:1
- Helical gears for quiet performance
- Motor size range 30W to 7.5kw
- Quick delivery

L_{50} Life: 20,000h

HPN-A Series Ratings

Size	Number of Stages	Ratio	Rated Torque	Repeated Peak Torque	Momentary Peak Torque
			Nm	Nm	Nm
11	1	4	14	14	40
		5	14	16	40
		7	11	11	40
		10	9	9	40
	2	15	18	24	40
		20	22	24	40
		25	20	24	40
		30	25	26	40
		35	26	26	40
		40	26	26	40
		45	26	26	40
		50	26	26	40
14	1	3	22	25	89
		4	28	50	110
		5	29	50	107
		7	30	37	100
		10	18	18	79
	2	15	30	43	97
		20	30	49	100
		25	30	38	102
		30	40	48	98
		35	40	49	99
		40	30	38	100
		45	30	38	100
		50	26	26	94
20	1	3	51	74	226
		4	80	130	256
		5	80	149	256
		7	80	113	256
		10	54	54	216
	2	15	80	129	256
		20	80	147	256
		25	80	114	256

Size	Number of Stages	Ratio	Rated Torque	Repeated Peak Torque	Momentary Peak Torque
			Nm	Nm	Nm
20	2	30	80	139	250
		35	80	112	256
		40	80	112	256
		45	80	112	256
		50	75	75	216
32	1	3	153	254	625
		4	198	376	625
		5	200	376	625
		7	200	376	625
		10	185	185	625
	2	15	200	376	625
		20	200	376	625
		25	200	376	625
		30	250	376	625
		35	250	376	625
		40	300	376	625
		45	300	376	625
		50	251	251	625
40	1	3	440	752	1137
		4	460	752	1265
		5	480	752	1265
		7	510	752	829
		10	480	509	829
	2	15	530	752	1265
		20	600	752	1265
		25	650	752	1127
		30	650	752	1265
		35	700	752	1127
		40	700	752	1127
		45	700	752	1127
		50	562	562	1162

Dimensions

Unit: mm

Symbol \ Size		11A	14A	20A	32A	40A
A		42	60	90	115	142
B	One Stage	93.5	117	160-184.5	200-264.5	282.5-328.5
	Two Stage	113	142	175-206.2	217.5-246.5	327-348

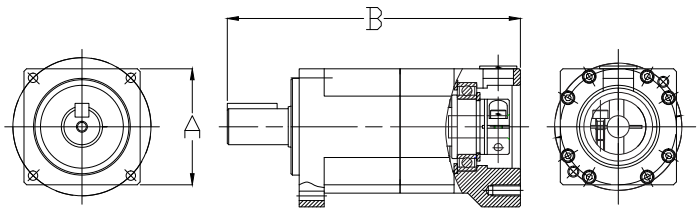

Dimensions depend upon the motor selected. Dimensions shown in the table are a typical range for reference only. Contact HDLLC for detailed dimensions of the gear used for your motor.

HPN-L Series

HPN face-mount value series planetary gearheads feature a robust design utilizing helical gears for quiet performance and long life. These gearheads are available with short lead times and are designed to couple to any servo motor with our Quick Connect® coupling system.

- Peak torque: 9Nm to 752Nm
- Available in 5 Frame Sizes
- High efficiency
- Backlash <5 arc-min (One-stage) , < 7 arc-min (Two-stage)
- Quick Connect® coupling system
- Reduction ratios between 3:1 and 50:1
- Helical gears for quiet performance
- Motor size range 30W to 7.5kW
- Quick delivery

L_{50} Life: 20,000h

HPN-L Series Ratings

Size	Number of Stages	Ratio	Rated Torque	Repeated Peak Torque	Momentary Peak Torque
			Nm	Nm	Nm
11	1	4	14	14	40
		5	14	16	40
		7	11	11	40
		10	9	9	40
	2	15	18	24	40
		20	22	24	40
		25	20	24	40
		30	25	26	40
		35	26	26	40
		40	26	26	40
		45	26	26	40
		50	26	26	40
14	1	3	22	25	89
		4	28	50	110
		5	29	50	107
		7	30	37	100
		10	18	18	79
	2	15	30	43	97
		20	30	49	100
		25	30	38	102
		30	40	48	98
		35	40	49	99
		40	30	38	100
		45	30	38	100
		50	26	26	94
20	1	3	51	74	226
		4	80	130	256
		5	80	149	256
		7	80	113	256
		10	54	54	216
	2	15	80	129	256
		20	80	147	256
		25	80	114	256

Size	Number of Stages	Ratio	Rated Torque	Repeated Peak Torque	Momentary Peak Torque
			Nm	Nm	Nm
20	2	30	80	139	250
		35	80	112	256
		40	80	112	256
		45	80	112	256
		50	75	75	216
32	1	3	153	254	625
		4	198	376	625
		5	200	376	625
		7	200	376	625
		10	185	185	625
	2	15	200	376	625
		20	200	376	625
		25	200	376	625
		30	250	376	625
		35	250	376	625
		40	300	376	625
		45	300	376	625
		50	251	251	625
40	1	3	440	752	1137
		4	460	752	1265
		5	480	752	1265
		7	510	752	829
		10	480	509	829
	2	15	530	752	1265
		20	600	752	1265
		25	650	752	1127
		30	650	752	1265
		35	700	752	1127
		40	700	752	1127
		45	700	752	1127
		50	562	562	1162

Dimensions

Unit: mm

Symbol \ Size		11L	14L	20L	32L	40L
A		50	70	90	120	155
B	One Stage	88	>109	150.9~174.8	212.5~251	292.5-358
	Two Stage	107.5	>134	178.5~196.5	248.6~272.5	338.5-358

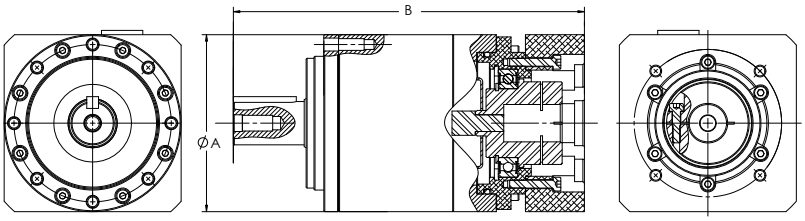

Harmonic Planetary® Gearhead
Quick Connect® Coupling

HPN-RA Series

HPN Right Angle value series planetary gearheads feature a robust design utilizing helical gears for quiet performance and long life. These gearheads are available with short lead times and are designed to couple to any servo motor with our Quick Connect® coupling.

- Peak torque 9Nm to 752Nm
- Backlash <6 arc-min (One-stage) , <9 arc-min (Two-stage)
- Quick Connect® coupling
- Reduction ratios between 3:1 and 50:1
- Helical gears for quiet performance

HPN-RA Series Ratings

Size	Number of Stages	Ratio	Rated Torque	Limit for Repeated Peak Torque	Limit for Momentary Torque	Backlash	Max. Input speed	Rated Input Speed
			Nm	Nm	Nm	arc•min	rpm	rpm
11	1	4	14	14	40	<9	10,000	3,000
		5	14	16	40	<8		
		7	11	11	40	<7		
		10	9	9	40			
14	1	3	21	21	78	<6	6,000	
		4	28	28	104			
		5	29	35	107			
		7	30	37	100			
		10	18	18	79			
	2	15	30	43	97	<9		
		20	30	49	100			
		25	30	38	102			
		30	40	48	98			
		35	40	49	99			
		40	30	38	100			
		45	30	38	100			
		50	26	26	94			
20	1	3	45	45	147	<6	6,000	
		4	60	60	196			
		5	75	75	245			
		7	80	105	256			
		10	54	54	216			
	2	15	80	105	256	<9		
		20	80	140	256			
		25	80	114	256			
		30	80	139	250			
		35	80	112	256			
		40	80	112	256			
		45	80	112	256			
		50	75	75	216			
32	1	3	84	84	288	<6	6,000	
		4	112	112	384			
		5	139	139	480			
		7	195	195	625			
		10	185	185	625			
	2	15	200	225	625	<9		
		20	200	297	625			
		25	200	371	625			
		30	250	376	625			
		35	250	376	625			
		40	300	376	625			
		45	300	376	625			
		50	251	251	625			
40	1	3	186	186	1104	<6	6,000	
		4	245	245	1265			
		5	310	310	1265			
		7	430	430	829			
		10	480	509	829			
	2	15	417	417	1265	<9		
		20	555	555	1265			
		25	650	694	1127			
		30	650	752	1265			
		35	700	752	1127			
		40	700	752	1127			
		45	700	752	1127			
		50	562	562	1162			

HPF Series

Hollow shaft planetary gear with output flange. The flange is integrated with a robust cross-roller bearing which can support high axial, radial and moment loads without the need for additional support bearings.

- Hollow Shaft Structure
- Coaxial input and output shafts
- Cross Roller Output Bearing
- Backlash < 3 arc-min
- The precision HPF planetary gear is also available in our SHA Series Hollow Shaft Brushless Actuators as a standard product

L_{10} Life: 20,000h

HPF Series Ratings

Item / Size	Ratio	Rated Torque		Limit for Repeated Peak Torque		Limit for Momentary Torque	
		Nm	In-lb	Nm	In-lb	Nm	In-lb
25	11	21	186	100	885	170	1505
32	11	44	389	220	1947	450	3983

Cross Roller Bearing Specification

Item / Size	Basic Rated Load				Allowable Moment Load Mc		Moment Stiffness Km	
	Basic Dynamic Rated Load C		Basic Static Rated Load Co					
	N	lb	N	lb	Nm	In-lb	x10⁴Nm/rad	In-lb/arc.min
25	11400	2563	20300	4564	410	3629	37.9	335
32	22500	5058	39900	8970	932	8249	86.1	762

**1: "Basic dynamic rated load" is a constant stationary radial load that achieves a basic dynamic rated life of the bearing of one million revolutions.

*2: "Basic static rated load" is a static load that achieves a contact stress of a constant level (408kN/mm^2) at the center of a contact zone between the rolling element receiving a maximum load and track.

Dimensions

Unit: mm

Symbol / Size	25	32
A	136	167
B	105.1	125.5
C	25	30

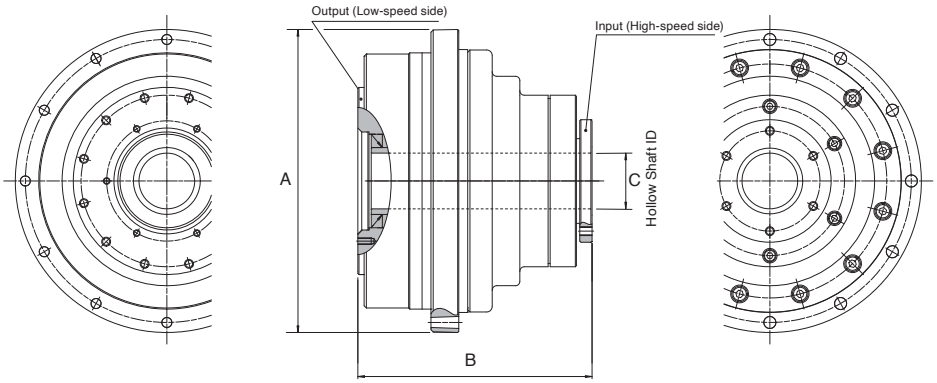

Harmonic Planetary® Gearhead
Quick Connect® Coupling

HPG Input Shaft

The HPG Harmonic Planetary® gearhead has the same high performance specifications as our standard HPG series but with an input shaft for shaft couplings or for use with motor offset with a belt drive. Same as the HPG, this gearhead incorporates continuous backlash compensation that ensures low backlash throughout the life of the gear. The large Cross Roller bearing serves as the output flange and can support large loads with high moment stiffness. HPG planetary gears are available with a flange output, smooth output shaft or a shaft with a key and tapped center hole.

- Shaft Input
- Available in 6 Frame Sizes
- Peak Torque: 5Nm to 3,200Nm
- Ratios: 3:1 to 50:1
- High Efficiency
- Backlash <3 arc-min (<1arc-min available as an option)
- High load capacity Cross Roller output bearing

HPG Input Shaft Specifications

Size	Ratio	Rated Torque L10*1	Rated Torque L50*1	Limit for Repeated Peak Torque*2	Limit for Momentary Torque*3
		Nm	Nm	Nm	Nm
11	5	2.5	5	7.8	20
	9	2.5	3.9	3.9	
	21	3.4	6	9.8	
	37	3.4	6		
	45	3.4	6		
14	3	2.9	6.4	15	37
	5	5.9	13	23	56
	11	7.8	15		
	15	9.0	15		
	21	8.8	15		
	33	10	15		
	45	10	15		
20	3	8.8	17	64	124
	5	16	35	100	217
	11	20	45		
	15	24	53		
	21	25	55		
	33	29	60		
	45	29	60		

*1: Rated torque is based on life of 20,000 hours at max average input speed.
*2: The limit for torque during start and stop cycles.
*3: The limit for torque during emergency stops or from external shock loads. Always operate below this value.
*4: Size 65 is built to order.

Size	Ratio	Rated Torque L10*1	Rated Torque L50*1	Limit for Repeated Peak Torque*2	Limit for Momentary Torque*3
		Nm	Nm	Nm	Nm
32	3	31	60	225	507
	5	66	150	300	650
	11	88	170		
	15	92	170		
	21	98	170		
	33	108	200		
	45	108	200		
50	3	97	160	657	1200
	5	170	290	850	1850
	11	200	340		
	15	230	400		
	21	260	450		
	33	270	470		
	45	270	500		
65*4	4	500	870	2200	4500
	5	530	900		
	12	600	1020		
	15	730	1260		
	20	800	1370		
	25	850	1470		
	40	640	1320	1900	
	50	750	1650	2200	

Dimensions

Unit: mm

Symbol \ Size	11	14	20	32	50	65
A	40	60	90	120	170	230
B	56 (65)*	99	119	171	219.5	254.5 (324.5)*
C	39	59	89	118	168.5	220

*Value in parenthesis is for two stage

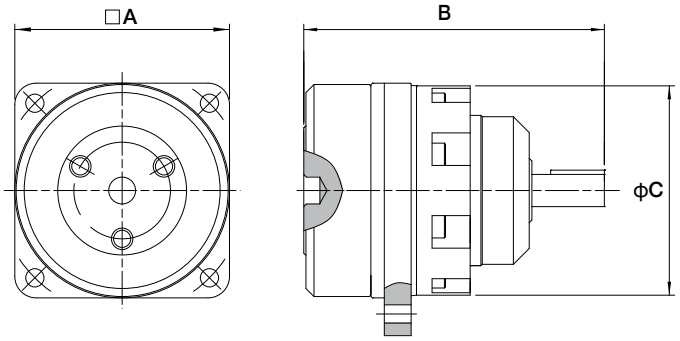

HPG Rack and Pinion Assembly

High accuracy helical rack and pinion sets are designed for high positioning accuracy and low noise. By having complete control over the design of the system, Harmonic Drive delivers max power density with high linear stiffness and high precision. The RK systems from Harmonic Drive are ideal for CNC machining centers, metal cutting machines, laser machines and high-precision milling machines.

- High-Precision Planetary Gearhead HPG Series + Rack & Pinion
- High accuracy helical rack and pinion
- Higher positioning accuracy
- Runout accuracy of the pinion gear installed on the gearhead is 15µm or less
- Low noise and vibration due to ground finish helical rack and pinion

HPG Rack and Pinion System Specifications

Gearhead Series	Module [mm]	Number of teeth of Pinion Gear	Limit for Linear Thrust [N]	Limit for Repeated Peak torque [N·m]	Limit for Momentary Torque [N·m]	Limit for Transportation Speed [m/min] * for R = 5	Mass of Pinion Gear [kg]
			Induction Hardening Rack	Induction Hardening Rack			
HPG-32R HPG-32A	2	35	5400	200	400	280	1.37
		40	5500	233	450	320	1.62
		45	5600	267	500	360	1.79
HPG-50 A	3	31	9800	483	1100	279	3.14
		35	9900	551	1150	315	3.62
		40	10000	636	1150	360	4.16

Rack Dimensions

Module m [mm]	Pitch Pt [mm]	Length L [mm]	Number of teeth z	a [mm]	a1 [mm]	B [mm]	d1 [mm]	d2 [mm]	d3 [mm]	hB [mm]	C +0.8/-0.2 [mm]	h [mm]	H [mm]	t [mm]	i [mm]	i1 [mm]	L1 [mm]	Mass M [kg]
2	6.666	500	75	31.7	436.6	24	6.6	11	5.7	8	2	22	24	6.5	62.5	125	8.5	2.0
		1000	150		936.6													4.1
3	10.000	500	50	35.0	430	29	9.0	14	7.7	9	2	26	29	8.6	62.5	125	10.3	2.9
		1000	100		875													5.7

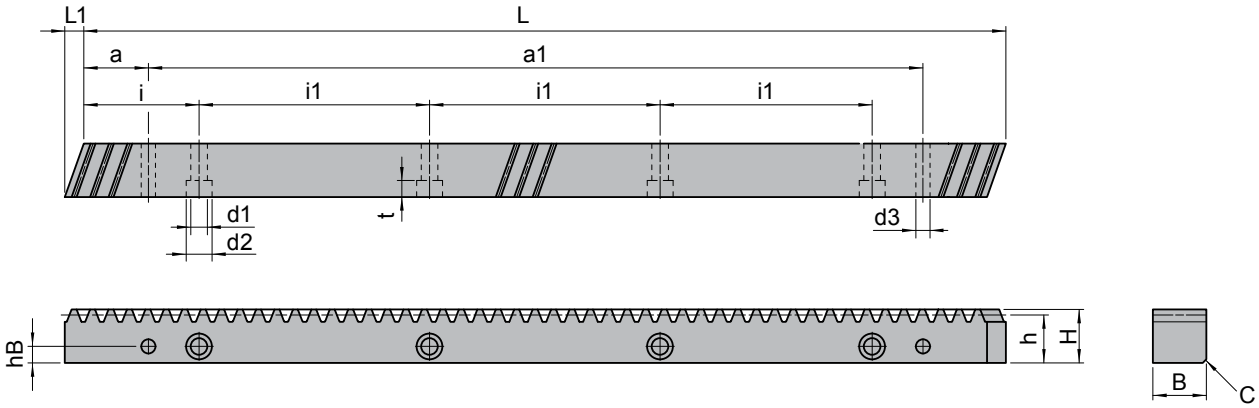

Applications

Robots

Industrial Robots
Collaborative Robots
Primary Axis
End Effectors
Linear Axis
Indexing Table

Humanoid Robots

Humanoid Robots
Joint Articulation
Robotic Hand
Vision Sensor Positioning
Torque Sensing

Machine Tools

Machining Centers
Turning Centers
Work Transfer Systems
CNC Grinders
EDM
Tool Changer
Tool Magazine
Work Positioning Equipment
Rotary Table
C Axis

Packaging Machines

Sealing Machines
Label Printing Machines
Label Attaching Machines
Work Transfer Systems
Shaft Synchronizing Drive
Roll Synchronizing Drive
Joint Drive

Printing, Bookbinding & Paper Processing Machines

Printing Presses
Folding Machines
Paper Changing Machines
Paper Positioning Machines
Paper Machines
Web Tension Control
Cutting Blade Positioning
Phase Adjusting
Roller Height Adjustment

Semiconductor Manufacturing Systems

- Mask & Reticle Manufacturing
- Wafer Fabrication Equipment
- Wafer Processing Equipment
- Test & Assembly Equipment
- Inspection Equipment
- Wafer Transfer Equipment
- Wafer Transfer Robots
- Positioning Drive
- Indexing Tables
- Wafer Flipper

Measurement, Analytical & Test Systems

- Photometric Equipment
- Three-Dimensional Measuring Instruments
- Metal Tensile Test Machines
- Soil-Column Yield Strength Test Machines
- Transfer Systems
- Positioning Drive
- Prism Positioning Drive
- Indexing Tables
- Direct Transmission Tables

Medical Equipment

- CT Systems
- X-Ray Machines
- Precision Joint Drive
- Bed Lifting & Inclination Drive
- Positioning Table Drive

Surgical Robots

- Robotic Assisted Surgery
- Surgical Robots
- Minimally Invasive Surgeries
- Single Port
- Gynecologic Surgery
- Prostate Surgery
- Head and Neck Surgery
- Colorectal Surgery
- Gastrointestinal Surgery
- Heart Surgery
- Joint Surgery

Medical Robots

- Medical Exoskeleton
- Rehabilitation Exoskeleton
- Military Exoskeleton
- Prosthetics
- Hip support
- Knee support
- Ankle
- Back
- Rehabilitation and Physical Therapy

Applications

Wood, Light Metal & Plastic Machine Tools

- Woodworking Machines
- 5-Axis Machining Centers
- 3-Axis Gantry Mills
- Work Transfer Systems
- Milling Head Drive
- Tool Magazine Drive
- Work Positioning Machines
- Rotary Table Drive
- Tool Positioning Machine Drive
- Direct Transmission Shaft Drive

Energy

- Oil Exploration Robot
- Wind Power Equipment
- Electric Power Equipment
- Photovoltaics
- Directional Drilling
- Propeller Pitch Control
- Solar Panel Positioning

Optical Machines

- X-Ray Analytical Systems
- Optical Component Inspection Systems
- Optical Measuring Instruments
- Surface Inspection Systems
- Optical Disc Manufacturing Systems
- Laser Markers
- PositioningTable Drive
- Lens Positioning Drive
- Laser Mirror Drive
- Prism Drive
- Probe Drive
- Sensor Positioning Drive

Telescopes

- Mirror Adjusting Mechanisms
- Primary and Secondary Mirror Position Control
- X, Y, Z Axis Drive
- Indirect Drive Mechanisms

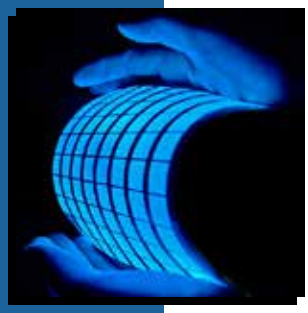

Flat Panel Display Systems

- Array Process Equipment
- Cell Process Equipment
- Assembly Process Equipment
- Work Transfer Systems
- Transfer Systems
- Positioning
- Indexing Tables
- Direct Transmission Tables
- Tension Controllers
- Hatch Opening/Closing Drive

Communication Equipment

- Antennas
- Cameras
- Wavelength Duplexers
- Radars
- Pan & Tilt Drives
- Prism Drive

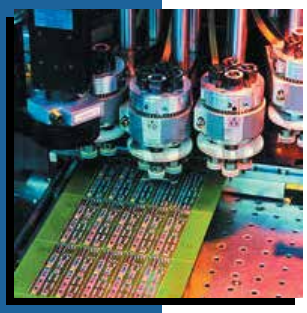

Printed Circuit Board Manufacturing Machines

- Electronic Component Insertion Machines
- Solder Paste Dispensing Machines
- Board Inspection Systems
- Transfer Systems
- Drilling Head Drive
- Tool Changer Drive
- Tool Magazine Drive
- Work Positioning Machines
- Rotary Table Drive
- Tool Positioning Machine Drive

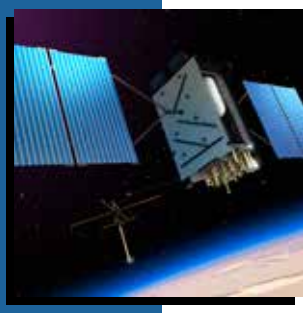

Aerospace

- Communication Antennas
- Solar Array Drives
- Robotic Joints
- Robotic Arms
- Pan & Tilt Drive
- Joint Drive
- Wheel Drive
- Satellites
- Lunar and Mars Rovers

Aircraft

- Flight Simulators
- Cargo Handling & Transfer Systems
- Reconnaissance Cameras
- Valves
- Valve Actuator
- Trolley Drive
- Cargo Wheel Power Drive Unit
- Fly-by-Wire Components

Defense

- Remote Weapons Station
- Bomb disposal robots
- Wheel drives
- Exoskeleton
- Gun turret

James Webb Telescope and Valkyrie images courtesy of NASA.

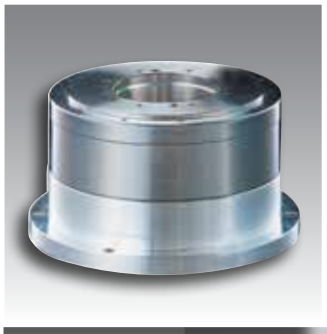

Harmonic Drive LLC

US Headquarters
42 Dunhham Ridge
Beverly, MA 01915

New York Sales Office
100 Motor Parkway, Suite 116
Hauppauge, NY 11788

California Sales Office
333 W. San Carlos Street, Suite 1070
San Jose, CA 95110

Chicago Sales Office
137 N. Oak Park Ave., Suite 410
Oak Park, IL 60301

T: 800.921.3332
T: 978.532.1800
F: 978.532.9406
www.HarmonicDrive.net

TI-26088 REV 1 HD General Catalog 072026

Group Companies

Harmonic Drive Systems, Inc.
6-25-3 Minami-Ohi, Shinagawa-ku
Tokyo 141-0013, Japan

Harmonic Drive SE
Hoenbergstrasse, 14, D-65555
Limburg/Lahn Germany

Harmonic Drive, Harmonic Drive Technologies, Harmonic Planetary, Infinit-Indexer and Quick Connect are registered trademarks of Harmonic Drive LLC. CANopen® is a registered trademark of the CAN in Automation User's Group. EtherCAT® is a registered trademark and patented technology, licensed by Beckhoff Automation GmbH, Germany.

"HarmonicDrive®" is a trademark of Harmonic Drive Systems Inc. The academic or general nomenclature of our products HarmonicDrive® is strain wave gearing. All specifications and dimensions in this manual subject to change without notice. This manual is correct as of July 2026.

All efforts have been made to ensure that the information in this catalog is complete and accurate. However, Harmonic Drive LLC is not liable for any errors, omissions or inaccuracies in the reported data. Harmonic Drive LLC reserves the right to change the product specifications, for any reason, without prior notice. For complete details please refer to our current Terms and Conditions posted on our website.