| REVISIONS | | | | | |
|---|---|---|---|---|---|
| REV | ECA NO. | BY | CHKD | APPD | DATE |
| A | ER 12-069 | WTH | RELEASED | | 6/18/2012 |
| B | 21-0622 | RCrouse | NLeberth | AMorlock | 04/07/2022 |

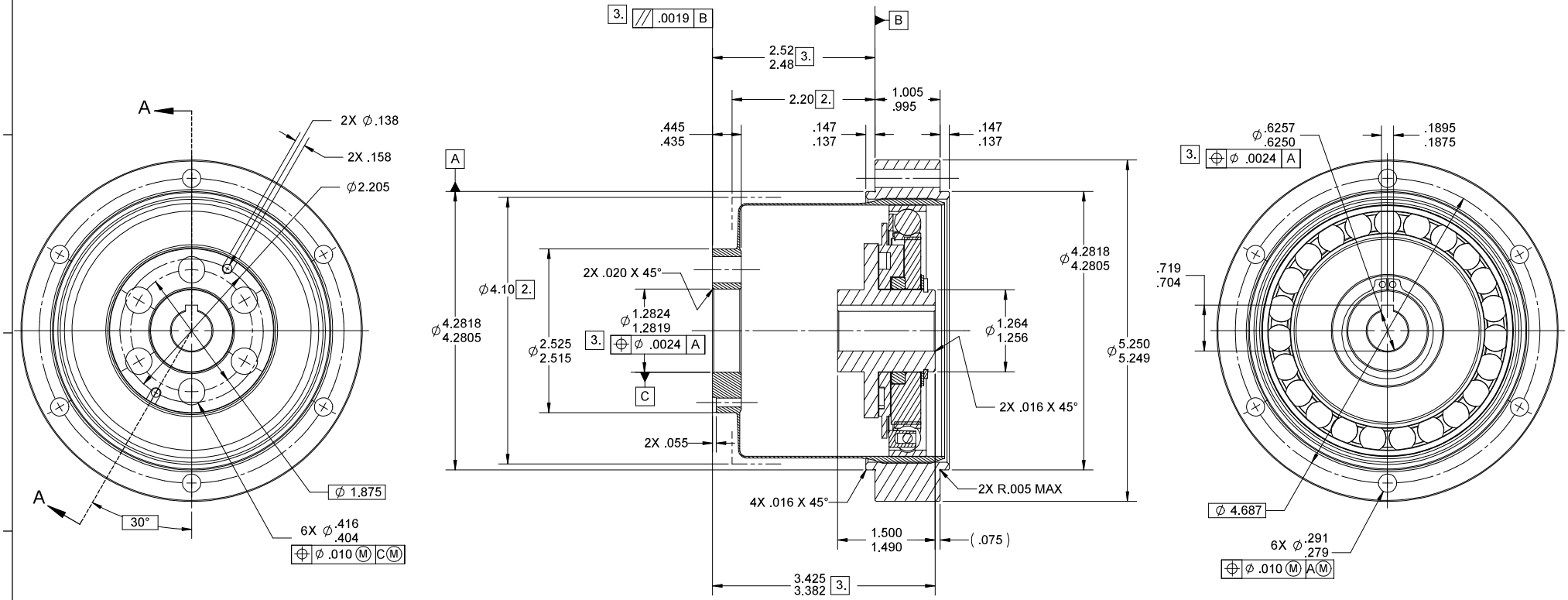


SECTION A-A

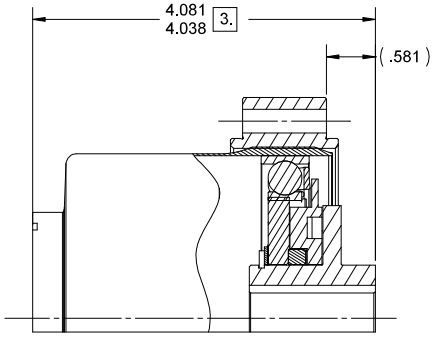


ALTERNATE W/G ORIENTATION

NOTES:

1. DESIGN AND/OR HANDLING OF HARMONIC DRIVE PRODUCTS MUST BE IN COMPLIANCE WITH TECHNICAL INFORMATION FOUND IN HARMONIC DRIVE CATALOGS AT: WWW.HARMONICDRIVE.NET/DOWNLOADS/CATALOGS

2. MINIMUM HOUSING CLEARANCE.

3. DIMENSIONS ESTABLISH INTERFACE AND INSTALLATION REQUIREMENTS. MAINTAIN AT ASSEMBLY AND UNDER ALL OPERATING LOAD CONDITIONS.

4. MAINTAIN COMPONENTS IN "AS RECEIVED" SERIALIZED SETS.

5. ALL CIRCULAR HOLE PATTERNS ARE EQUALLY SPACED, UNLESS OTHERWISE SPECIFIED.

6. TO ORDER USE PART NUMBER 28-040XXXUS, WHERE XXX IS THE GEAR RATIO.


**PROPRIETARY AND CONFIDENTIAL**
THIS DRAWING CONTAINS VALUABLE CONFIDENTIAL AND PROPRIETARY TRADE SECRET INFORMATION OF HARMONIC DRIVE LLC. COPYING, DISCLOSING, OR USING THIS INFORMATION WITHOUT THE EXPRESS WRITTEN AUTHORIZATION OF HARMONIC DRIVE LLC IS PROHIBITED.


THIRD ANGLE

THIS DOCUMENT WAS CREATED IN ACCORDANCE WITH ASME Y14.5-2018.

DIMENSIONS ARE IN INCHES UNLESS OTHERWISE SPECIFIED.

| | |
|---|---|
| DRAFTER WTH 6/5/12 | CHECKER RWC 6/8/12 |
| MAT'L ENG. THB 6/11/12 | DESIGN ENG. HDSI |
| MFG. ENG. CDM 6/11/12 | QUALITY |
| SIMILAR TO | |


HarmonicDrive®
42 DUNHAM RIDGE
BEVERLY MA 01915-1844
www.harmonicdrive.net


TITLE:

# INSTALLATION DRAWING HDE-40-XXX-2A-GR

| SIZE | CAGE CODE | DWG. NO. | REV |
|---|---|---|---|
| C | 34519 | 1010827 | B |

SCALE: 7:8 SHEET 1 OF 1